LM531

5-Unit Reel Mower

Owner's Operating Manual

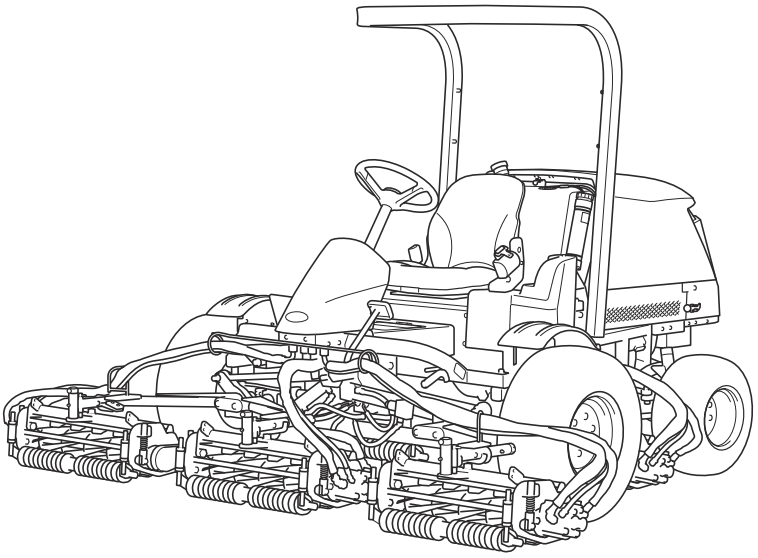

Serial No.　LM531：10041-

"Required reading"
Read this manual before using the machine.

BARONESS®
Quality on Demand

Original Instructions (en)

Ver.3.0

Regulations

California Proposition 65

(For California, USA)

⚠ WARNING:

Operating, servicing and maintaining a passenger vehicle or off-road vehicle can expose you to chemicals including engine exhaust, carbon monoxide, phthalates, and lead, which are known to the State of California to cause cancer and birth defects or other reproductive harm. To minimize exposure, avoid breathing exhaust, do not idle the engine except as necessary, service your vehicle in a well-ventilated area and wear gloves or wash your hands frequently when servicing your vehicle. For more information go to www.P65Warnings.ca.gov/passenger-vehicle.

318yi8-005

318yi8-005

California Spark Arrester

(For California, USA)

⚠ Warning

Operation of this equipment may create sparks that can start fires around dry vegetation.
A spark arrester may be required.
The operator should contact local fire agencies for laws or regulations relating to fire prevention requirements.

It is a violation of California Public Resource Code Section 4442 or 4443 to use or operate the engine on any forest-covered, brush-covered, or grass-covered land unless the engine is equipped with a spark arrester, as defined in Section 4442, maintained in effective working order or the engine is constructed, equipped, and maintained for the prevention of fire pursuant to Section 4443.
The engine of this machine is not equipped with a spark arrester.
In some areas there are local, state, or federal regulations requiring that a spark arrester be used on the engine of this machine.
The recommended spark arrester for this machine is Part No.49028N Spark Arrester made by Nelson Global Products.

EU Regulations

(For EU)
This product complies with all relevant EU Regulations.
For more information, please refer to the Declaration of Conformity attached.

Introduction

Read this manual carefully to ensure that you thoroughly understand how to properly operate and maintain the product, and to avoid causing injury to yourself or others.

The operator is responsible for operating the product properly and safely.

Maintenance service for this machine should be performed by a mechanic with expertise.

If you have any questions concerning maintenance or genuine parts, please contact a Baroness dealer or Kyoeisha.

When making inquiries about your product, please specify the model and serial number.

When loaning or transferring the product, please also provide this manual together with the product.

Kyoeisha Co., Ltd.

Greeting

Thank you for purchasing the Baroness product.
This manual describes how to operate this product safely and correctly, as well as daily inspection and maintenance methods.
Prior to use, carefully read this manual to thoroughly understand the contents.
For handling attachments not described in this manual, please refer to the owner's operating manual for attachments.
We hope you will use the product safely and correctly, and take advantage of its best performance.

Introduction

About This Manual

1. Attention
   [1] The operator is responsible for operating the product properly and safely.
   Read this manual carefully to ensure that you thoroughly understand the contents, and to avoid causing injury to yourself or others.
   [2] Maintenance service for this product should be performed by a mechanic with expertise.
   [3] If you have any questions concerning handling, maintenance or genuine parts, please contact a Baroness dealer or Kyoeisha.
   [4] When loaning or transferring the product, please also provide this manual together with the product.
   [5] When making inquiries about your product, please specify the model and serial number.
2. Notice
   [1] Due to product improvements or specification changes, the contents described in this manual may be altered without notice.
   [2] This manual has been prepared with the utmost care to avoid mistakes or omissions, however, if you find any mistakes or omissions, please contact a Baroness dealer or Kyoeisha.
   [3] If you take this product out of the designated country for sale and use it, it may not comply with the regulations of the destination country or region (such as safety standards or radio laws), and it will not be covered by the warranty.
   Furthermore, Kyoeisha assumes no responsibility whatsoever for any troubles or penalties arising from these issues.
   [4] If the contents of this manual differ depending on the destination, the product details are explained using the ISO3166 country code (two characters).
   Please check the applicable destination for your purchased model and read the relevant contents.
   e.g.

Country	Country code
Japan	JP (*1)
USA	US
UK	GB (*2)
Australia	AU

   (*1: Including South Korea and China)
   (*2: Including European countries)
   [5] Kyoeisha assumes no responsibility for any damages or lost profits caused by improper handling by customers or third parties, product disassembly or modification, or other force majeure events (such as natural disasters).
   [6] Kyoeisha assumes no responsibility for any loss or damage of data or programs caused by malfunctions, failures, or repairs of the equipment.
   We recommend regularly backing up your important data.

Keeping the Owner's Operating Manual

Keep this Manual in the box on the left side of the fuel tank.

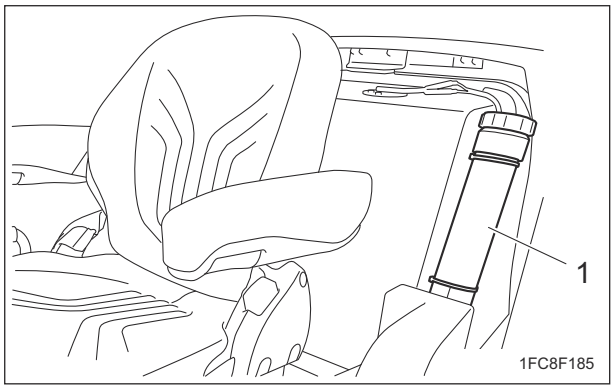

1FC8F185

1	Box

QR Code

(*QR Code is a registered trademark of DENSO WAVE INCORPORATED.)
A QR code label is affixed on the machine.

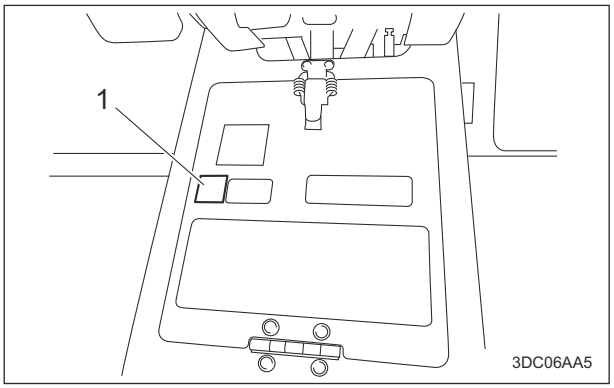

3DC06AA5

1	QR code label

Scan the QR code with your smartphone for easy access to Baroness Manual Reference Service where you can browse Owner's Operating Manual and Parts Catalog.
https://doc.baroness-international.com/manuals/LM531

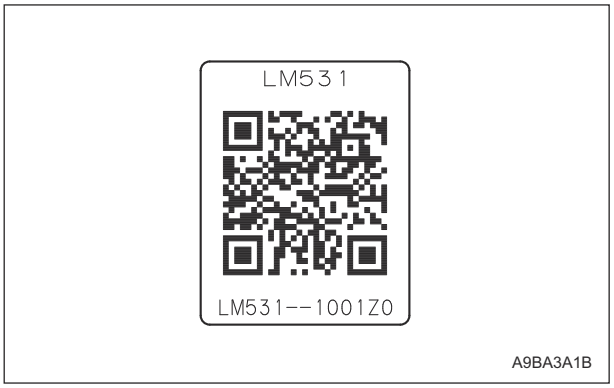

A9BA3A1B

Note:
A QR code for mower unit is printed on the serial number plate.

Introduction

Warning Symbols

This manual uses the following warning symbols for handling precautions that are important for your safety.

696cq5-001	Warning symbol

This symbol indicates the articles regarding “Danger,” “Warning,” or “Caution.”

Those articles describe important safety precautions and so read them carefully to understand completely before operating the machine.

Failure to adequately follow these safety precautions may cause an accident.

Danger

This symbol indicates that serious injury or death will occur if the warning is ignored.

Warning

This symbol indicates that serious injury or death may occur if the warning is ignored.

Caution

This symbol indicates that injury or damage to property may occur if the warning is ignored.

Important

This symbol indicates precautions on the mechanism of the machine.

Precautionary Statement

⚠ Caution

The information described in this manual is subject to change for improvement without prior notice.
When replacing parts, be sure to use genuine Baroness parts or parts designated by Kyoeisha.
Note that the Baroness product warranty may not apply to defects caused by the use of parts from other companies.

Prior to use, carefully read the following manuals to thoroughly understand the contents for safe and correct operation.

- Baroness Owner's Operating Manual
- The Engine's Owner's Manual
- The Battery's Owner's Manual

Purpose

This product is intended for cutting turf grass at golf courses.
Do not use this product in any way other than its intended purpose, and do not modify this product.
Operating this product for other purposes and modifying it may be very dangerous and may cause damage to the product.
In addition, this product is not authorized for operation as a special motor vehicle. Do not operate it on public roads.

Introduction

Contents

Safety ..... Page 1-1

Safe Operating Practices ..... Page 1-2

Disposal ..... Page 2-1

Recycle and Waste Disposal ..... Page 2-2

Product Overview ..... Page 3-1

Specifications ..... Page 3-2
Names of Each Section ..... Page 3-6
Regulation Decals ..... Page 3-8
Safety Signs and Instruction Signs ..... Page 3-14
Operation Decals ..... Page 3-21

Description of Functions ..... Page 4-1

Light Switch ..... Page 4-2
Key Switch ..... Page 4-2
Throttle Lever ..... Page 4-2
Mower Unit Up/Down Lever ..... Page 4-3
Stop Valve ..... Page 4-3
Mower Lock Lever (Latch) ..... Page 4-4
Reel Rotation Switch ..... Page 4-4
Reel Reverse Switch ..... Page 4-5
Reel Rotation/Stop Switching Lever ..... Page 4-5
Traveling Pedal ..... Page 4-5
Pedal Stopper ..... Page 4-6
Brake Pedal ..... Page 4-6
Parking Brake Lock Lever ..... Page 4-6
USB Socket ..... Page 4-7
Instruments on The Operation Panel ..... Page 4-7
Safety Device ..... Page 4-10
Warning Mechanisms ..... Page 4-10

Handling Instructions ..... Page 5-1

Operations before Service ..... Page 5-2
Inspection before Use ..... Page 5-3
Adjustment before Work ..... Page 5-10
Mounting and Dismounting ..... Page 5-12
Start/Stop of Engine ..... Page 5-12
Parking and Stopping ..... Page 5-14
Move ..... Page 5-14
Cutting Work ..... Page 5-15
Transporting ..... Page 5-16
Cleaning after Use ..... Page 5-17
Storage ..... Page 5-19

Maintenance ..... Page 6-1

Precautions for Maintenance ..... Page 6-2
Operations before Maintenance ..... Page 6-2
Jacking Up The Machine ..... Page 6-2
Inspection and Cleaning ..... Page 6-3
Supplying Fluids ..... Page 6-8
Greasing ..... Page 6-12
Lubrication ..... Page 6-15
Adjustment ..... Page 6-17
Replacement ..... Page 6-18
Storage ..... Page 6-27

Repair ..... Page 7-1

Precautions for Repair ..... Page 7-2
Adjustment ..... Page 7-2
Replacement ..... Page 7-4
Towing ..... Page 7-6

Appended Table ..... Page 8-1

Tightening Torques ..... Page 8-2
Daily Check List ..... Page 8-7
Maintenance Schedule ..... Page 8-8
List of Adjusted Values ..... Page 8-13

Records ..... Page 9-1

Daily Check Records ..... Page 9-2
Maintenance Records ..... Page 9-5

Contents

Safe Operating Practices ..... Page 1-2

Training ..... Page 1-2
Preparation ..... Page 1-2
Operation ..... Page 1-3
Maintenance ..... Page 1-4
Storage ..... Page 1-5

Safety

Failure to adequately follow these safety precautions may cause an accident resulting in injury or death.

Danger

This product is designed to ensure safe operation and has been tested and inspected thoroughly before shipment from the factory.
The product is equipped with safety devices to prevent accidents.
However, whether the product demonstrates its original performance level depends on the manner in which it is operated and handled, as well as the manner in which it is managed on a daily basis.
Inappropriate use or management of the product may result in injury or death.
Observe the following safety instructions to ensure safe operation.

Safe Operating Practices

Training

1. Read this manual and other training material carefully.
   Be familiar with the controls, safety signs, and the proper use of the equipment.
2. If the operator or mechanic can not read the language used in this manual, it is the owner's responsibility to explain this material to them.
3. All operators and mechanics should seek and obtain professional and practical instruction.
   The owner is responsible for training the users.
   Such instruction should emphasize:
   [1] The need for care and concentration when working with ride-on machines.
   [2] Control of a ride-on machine sliding on a slope will not be regained by the application of the brake.
   The main reasons for loss of control are
   - Insufficient wheel grip
   - Being driven too fast
   - Inadequate braking
   - The type of machine is unsuitable for its task
   - Lack of awareness of the effect of ground conditions, especially slopes
   - Incorrect hitching and load distribution
4. Never allow children or people unfamiliar with these instructions to use or service the machine.
   Local regulations may restrict the age of the operator.
5. The owner/user can prevent and is responsible for accidents or injuries occurring to themselves, other people, or property.
6. Keep in mind that the owner, operator, and mechanic are responsible for accidents or hazards occurring to other people or their property.
7. The ROPS is an integral and effective safety device.
   Do not remove or alter the ROPS.
8. Replace a damaged ROPS.
   Do not repair or alter.
9. You can find additional safety information where needed throughout this manual.
10. Determine the left and right sides of the machine from the normal operating position.

Preparation

1. Evaluate the terrain to determine what accessories and attachments are needed to properly and safely perform the job.
   Only use accessories and attachments approved by the manufacturer.
2. While operating, always wear substantial footwear, long trousers, hard hat, safety glasses, mask, and ear protection.
   Long hair, loose clothing, or jewelry may get tangled in moving parts.
   Do not operate the equipment when barefoot or wearing open sandals.
3. Inspect the area where the equipment is to be used and remove all objects such as rocks, toys and wire which can be thrown by the machine.
4. Keep children out of the operating area and under the watchful care of a responsible adult other than the operator.
5. Exercise care in the handling of fuel.

Warning

Fuel is highly flammable.
Take the following precautions:

[1] Store fuel in containers specifically designed for this purpose.

[2] Add fuel before starting the engine.
Never remove the cap of the fuel tank or add fuel while the engine is running or when the engine is hot.

[3] Refuel outdoors only and do not smoke while refueling.

[4] If fuel is spilled, do not attempt to start the engine but move the machine away from the area of spillage and avoid creating any source of ignition until petrol vapours have dissipated;

[5] Replace all fuel tanks and container caps securely.

6. Check that operator's presence controls, safety switches and shields are attached and functioning properly.
Do not operate unless they are functioning properly.
7. If the brake operation is faulty, be sure to adjust or repair them before operating the machine.
8. Replace faulty mufflers.
9. On multi-cylinder/multi-reel machines, take care as rotating one cylinder/reel can cause other cylinders/reels to rotate.

Operation

1. Do not use the machine while you are tired or under the influence of drugs, alcohol or medication.
A moment of inattention while operating the machine may result in serious personal injury.
2. Do not operate the engine in a confined space where dangerous carbon monoxide fumes can collect.
3. Be sure all drives and shift are in neutral and parking brake is engaged before starting engine.
Only start engine from the operator's position.
Use seat belts if provided.
4. Do not change the engine governor settings or overspeed the engine.
Operating the engine at excessive speed may increase the hazard of personal injury.
5. Never operate the machine with damaged guards, shields, or without safety protective devices in place.
Be sure all interlocks are attached, adjusted properly, and functioning properly.
6. Keep hands and feet away from the rotating parts.
7. Do not carry passengers.
8. Never operate while people, especially children, or pets are nearby.
9. Only operate in good light, keeping away from holes and hidden hazards.
10. Do not operate the machine when there is the risk of lightning.
11. Do not operate the machine in rain or wet conditions.
This may increase the risk of electric shock.
12. Do not stop or start suddenly.
13. Look behind and down before backing up to be sure of a clear path.
14. Slow down and use caution when making turns and crossing roads and sidewalks.
15. Use care when approaching blind corners, shrubs, trees, or other objects that may obscure vision.
16. Do not take your eyes off the road ahead.
Do not operate the machine with no hands.
17. Remember there is no such thing as a safe slope.
Travel on grass slopes requires particular care.
To guard against overturning, follow these instructions.

[1] Do not stop or start suddenly when going up or downhill.

[2] Engage clutch slowly, always keep machine in gear, especially when traveling downhill.

[3] Machine speeds should be kept low on slopes and during turns.

[4] Stay alert for humps and hollows and other hidden hazards.

18. Never use the machine on a slope with an angle of gradient that is greater than that specified or in a place where there is a danger of the machine slipping.
19. Use extra care while operating machine with a grass catcher or other attachments.
They can affect the stability of the machine.
20. Disengage drive to the cutting unit(s), when other than operating.
21. Do the following before leaving the operator's position.

[1] Stop on level ground.

[2] Disengage the all drives.

[3] Set the parking brake.
[4] Stop the engine.
[5] Remove the ignition key.

22. Stop the engine in the following conditions.
    [1] Before refuelling.
    [2] Before removing the grass catcher.
    [3] Before making height or depth adjustment unless adjustment can be made from the operator's position.
    [4] Before clearing blockages.
    [5] Before checking, cleaning or working on the machine.
    [6] After striking a foreign object or if an abnormal vibration occurs.
    Inspect the machine for damage and make repairs before restarting and operating the equipment.
23. Reduce the throttle setting during engine run-out.
24. Do not direct discharge material toward anyone.
    Avoid discharging material against a wall or obstruction.
    Material may ricochet back toward the operator.
25. Take care when loading or unloading the machine into a trailer or a truck.
    Load or unload the machine in a flat and safe place.
    Before loading or unloading, set the parking brake on the truck or trailer, stop the engine, and chock the wheels.
    When transporting the machine on a truck or a trailer, set the parking brake, stop the engine, and fasten the machine to the truck with a rope or other suitable restraining device that has sufficient strength.
    When using a running board, select one with sufficient strength, length, and width and that will not cause the machine to slip.
26. Close the fuel valve before transporting the machine.

Maintenance

1. Never allow untrained personnel to service machine.
2. Implement the following work before adjusting, cleaning or repairing.
    [1] Stop the machine on level ground.
    [2] Disengage drive to the cutting unit(s).
    [3] Lower the cutting unit(s) and/or attachment(s).
    [4] Set the parking brake.
    [5] Stop the engine.
    [6] Remove the ignition key.
    [7] Wait for all movement to stop.
3. Allow the engine/muffler to cool before checking/maintenance.
4. To reduce the fire hazard, keep hot parts such as the engine and silencer/muffler, battery compartment and fuel storage area free of grass, leaves, or excessive grease. Clean up oil or fuel spillage.
5. Appropriately manage and correctly use the tools necessary for servicing or adjusting the machine.
6. Disconnect battery before making any repairs.
    Disconnect the negative terminal first and the positive last.
    Reconnect positive first and negative last.
7. Use jack stands to support components when required.
8. Keep hands and feet away from moving parts.
    If possible, do not make adjustments with the engine running.
9. Make sure that parts such as wires are not touching each other and that their covers have not come off.
10. Keep all parts in good working condition and all hardware tightened.
    Replace all worn or damaged decals.
11. Keep all nuts, bolts and screws tight to be sure the equipment is in safe working condition.
12. Carefully release pressure from components with stored energy.
13. Be sure to depressurize the hydraulic system before performing maintenance operations on it such as removing hydraulic equipment.
14. Check whether line connectors in the hydraulic system are properly tightened.
    Before applying hydraulic pressure, check the connections of the hydraulic pressure lines and the condition of the hoses.

15. When checking the hydraulic circuit for pinhole leaks or oil leakage from nozzles, do not use your hands.
    Use items such as paper or corrugated cardboard to find leakage points.
    Be extremely careful with high-pressure oil as it may pierce your skin, resulting in an injury.
    If fluid is injected into the skin it must be surgically removed within a few hours by a doctor familiar with this form of injury or gangrene may result.
16. Use care when checking the cylinders/reels and bed knives.
    Wear gloves and use caution when servicing them.
17. Be careful during adjustment of the machine to prevent entrapment of the fingers between moving blades and fixed parts of the machine.
18. On multi-cylinder/multi-reel machines, take care as rotating one cylinder/reel can cause other cylinders/reels to rotate.
19. Check the grass catcher frequently for wear or deterioration.
20. Charge batteries in an open well ventilated area, away from spark and flames.
    Unplug charger before connecting or disconnecting from battery.
    Wear protective clothing and use insulated tools.
21. If the fuel tank has to be drained, do this outdoors.

Storage

1. When machine is to be parked, stored, or left unattended, lower the cutting unit(s) and/or attachment(s) unless a positive mechanical lock is provided.
2. Allow the engine to cool before storing in any enclosure.
3. Only cover the machine with a sheet after hot parts have sufficiently cooled down.
4. Never store the equipment with fuel in the tank inside a building where fumes may reach an open flame or spark.
5. If the engine is provided with a shut-off valve, shut off valve while storing or transporting.
6. Do not store fuel near flames.
7. Swallowing engine coolant can cause injury or death; keep out of reach from children and pets.

Disposal

Recycle and Waste Disposal ..... Page 2-2

About Recycle .....Page 2-2
About Waste Disposal ..... Page 2-2

Disposal

Recycle and Waste Disposal

About Recycle

Recycling battery etc. is recommended for environmental conservation and economical use of resources.
It may be required by local laws.

About Waste Disposal

Make sure that waste generated when servicing or repairing the machine is disposed of in accordance with local regulations.
(e.g. waste oil, antifreeze, rubber products, and wires etc.)

Specifications ..... Page 3-2

Specifications .....Page 3-2
Mower Units .....Page 3-5
Sound Pressure Level ..... Page 3-5
Sound Power Level ..... Page 3-5
Vibration Level .....Page 3-5
Carbon Dioxide (CO2) Emissions .....Page 3-5

Names of Each Section .....Page 3-6

Regulation Decals .....Page 3-8

Positions of Regulation Decals .....Page 3-8
Description of Regulation Decals ..... Page 3-10

Safety Signs and Instruction Signs ... Page 3-14

About Safety Signs and Instruction Signs .....Page 3-14
Positions of Safety Decals and Instruction Decals .....Page 3-14
Description of Safety Decals and Instruction Decals .....Page 3-17

Operation Decals ..... Page 3-21

Positions of Operation Decals ..... Page 3-21
Description of Operation Decals .....Page 3-22

Specifications

Specifications

[JP]
[GB]

Model				LM531	
Name				5-Unit Reel Mower	
Mower unit type				22 in	
Dimensions	Total length			303 cm	119.29 in
	Total width	LH52	During operation	-	
			During transport	-	
		LS62	During operation	296 cm	116.54 in
			During transport	220 cm	86.61 in
	Total height		ROPS	196 cm	77.17 in
			Steering wheel	133 cm	52.36 in
Weight	Machine (empty fuel tank)	LH52	with Slight lift, ROPS	-	
		LS62	with Slight lift, ROPS	1,250 kg	2755.73 lb
Minimum turning radius		LH52	Front wheel (outer wheel) outside	-	
			Outer side of unit	-	
		LS62	Front wheel (outer wheel) outside	290 cm	114.17 in
			Outer side of unit	349 cm	137.40 in
Engine	Model			Kubota D1105-E4B	
	Type			Vertical Water-cooled 4-cycle diesel engine	
	Total displacement			1,123 cm^3 (1.123 L)	68.52 cu.in.
	Maximum output			-	
	Rated output			18.5 kW (25.2 PS)/3,000 rpm	
Fuel tank capacity				Diesel 38.0 dm^3 (38.0 L)	Diesel 10.04 U.S.gals
Fuel consumption				289 g/kW・h (rated output)	213 g/PS・h (rated output)
Engine oil capacity				3.1 dm^3 (3.1 L)	0.82 U.S.gal.
Coolant volume				6.0 dm^3 (6.0 L)	1.59 U.S.gal.
Hydraulic tank capacity				35.0 dm^3 (35.0 L)	9.25 U.S.gal.
Transmission oil capacity				-	
Operating width (Mowing width)				252 cm	99.21 in
Operating height (Mowing height)		LH52		-	

Operating height (Mowing height)	LS62	10.0 - 60.0 mm	0.39 - 2.36 in
Number of Blades		9	
Drive	Traveling	HST (2WD/4WD selectable)	
	Mowing	Hydraulic	
Speed (HST)	Forward	0 – 15.5 km/h	0 - 9.63 mph
	Reverse	0 - 8.0 km/h	0 - 4.97 mph
Speed (Mechanical)		-	
Efficiency		20,160 m^2/h (10.0 km/h x mowing width x 0.8)	4.98 acres/hour (6.22 mph x mowing width x 0.8)
Maximum inclination for operation		15 degrees	
Tire size	Front wheel	26.0 x 10.50 - 12	
	Rear wheel	20 x 10.00 - 10	
Tire pneumatic pressure	Front wheel	140 kPa (1.4 kgf/cm^2)	20 psi
	Rear wheel	100 kPa (1.4 kgf/cm^2)	15 psi
Battery		75D23L	
Engine plug		-	

The factory default maximum engine rpm is 3,100 rpm.
[US]

Model				LM531	
Name				5-Unit Reel Mower	
Mower unit type				22 in	
Dimensions	Total length			303 cm	119.29 in
	Total width	LH52	During operation	292 cm	114.96 in
			During transport	220 cm	86.61 in
		LS62	During operation	296 cm	116.54 in
			During transport	220 cm	86.61 in
	Total height		ROPS	196 cm	77.17 in
			Steering wheel	133 cm	52.36 in
Weight	Machine (empty fuel tank)	LH52	with Slight lift, ROPS	1,189 kg	2621.25 lb
		LS62	with Slight lift, ROPS	1,250 kg	2755.73 lb
Minimum turning radius		LH52	Front wheel (outer wheel) outside	290 cm	114.17 in
			Outer side of unit	347 cm	136.61 in
		LS62	Front wheel (outer wheel) outside	290 cm	114.17 in

Product Overview

Minimum turning radius		LS62	Outer side of unit	349 cm	137.40 in
Engine	Model			Kubota D1105-E4B	
	Type			Vertical Water-cooled 4-cycle diesel engine	
	Total displacement			1,123 cm^3 (1.123 L)	68.52 cu.in.
	Maximum output			-	
	Rated output			17.4 kW (23.7 PS)/3, 000 rpm	
Fuel tank capacity				Diesel 38.0 dm^3 (38.0 L)	Diesel 10.04 U.S.gals
Fuel consumption				289 g/kW・h (rated output)	213 g/PS・h (rated output)
Engine oil capacity				3.1 dm^3 (3.1 L)	0.82 U.S.gal.
Coolant volume				6.0 dm^3 (6.0 L)	1.59 U.S.gal.
Hydraulic tank capacity				35.0 dm^3 (35.0 L)	9.25 U.S.gal.
Transmission oil capacity				-	
Operating width (Mowing width)				252 cm	99.21 in
Operating height (Mowing height)		LH52		5.0 - 20.0 mm	0.20 - 0.79 in
		LS62		10.0 - 60.0 mm	0.39 - 2.36 in
Number of Blades				9	
Drive	Traveling			HST (2WD/4WD selectable)	
	Mowing			Hydraulic	
Speed (HST)	Forward			0 – 15.5 km/h	0 - 9.63 mph
	Reverse			0 - 8.0 km/h	0 - 4.97 mph
Speed (Mechanical)				-	
Efficiency				20,160 m^2/h (10.0 km/h x mowing width x 0.8)	4.98 acres/hour (6.22 mph x mowing width x 0.8)
Maximum inclination for operation				15 degrees	
Tire size	Front wheel			26.0 x 10.50 - 12	
	Rear wheel			20 x 10.00 - 10	
Tire pneumatic pressure	Front wheel			140 kPa (1.4 kgf/cm^2)	20 psi
	Rear wheel			100 kPa (1.4 kgf/cm^2)	15 psi
Battery				75D23L	
Engine plug				-	

The factory default maximum engine rpm is 3,100 rpm.

Mower Units

Baroness mower unit that can fit this machine is the model marked with a circle in the "Attachable unit" column.
LM531

Model		Attachable unit	Remarks
LH52	22 in	○	
LH62	22 in	-	
LH66	26 in	-	
LS60	30 in	-	
LS62	22 in	○	
LS66	26 in	-	
VM60	30 in	-	
VM62	22 in	-	
VM66	26 in	-	

Sound Pressure Level

Sound Pressure Level

This machine was confirmed to have a continuous A-weighted sound pressure level of 88 dB by measuring identical machines in accordance with the procedure specified in ISO5395-1:2013.

Sound Power Level

Sound Power Level

This machine was confirmed to have a sound power level of 105dB by measuring identical machines in accordance with the procedure specified in ISO5395-1:2013.

Vibration Level

Hand-Arm Vibration

This machine was confirmed not to exceed a vibration level of 2.5 m/s^2 to hands and arms by measuring identical machines in accordance with the procedure specified in ISO 5395-1:2013.

Whole Body Vibration

This machine was confirmed not to exceed a vibration level of 0.5 m/s^2 to the whole body by measuring identical machines in accordance with the procedure specified in ISO 5395-1:2013.

Carbon Dioxide (CO_2) Emissions

[GB]
For the CO_2 value on the engine of this machine, refer to the engine's owner's manual.

Names of Each Section

Overall view A

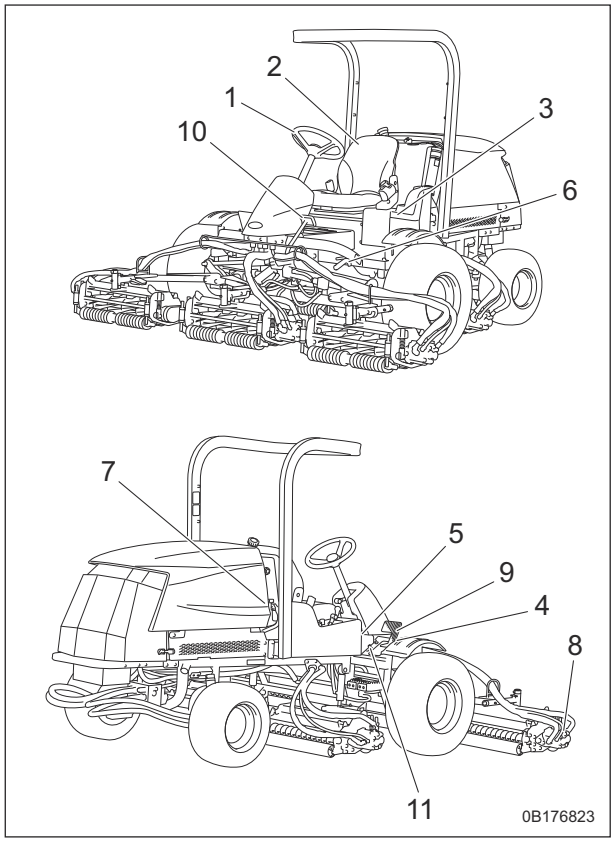

0B176823

1	Steering wheel
2	Seat
3	USB socket
4	Pedal stopper
5	Stop valve
6	Mower lock lever (Latch)
7	Reel reverse switch
8	Reel rotation/stop switching lever
9	Traveling pedal
10	Brake pedal
11	Parking brake lock lever

Overall view B

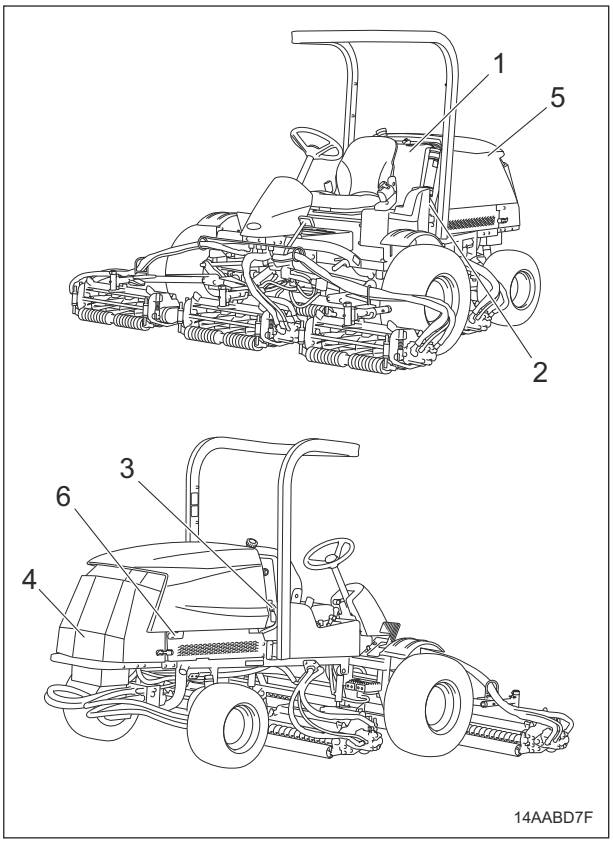

14AABD7F

1	Fuel tank
2	Fuel filter
3	Water separator
4	Battery
5	Hood
6	Muffler

Overall view C

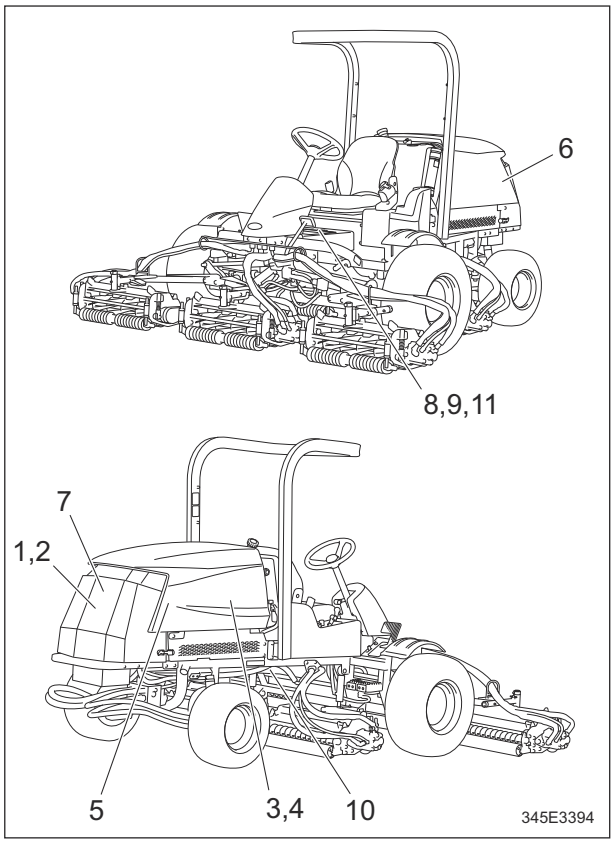

345E3394

1	Radiator
2	Radiator cover
3	Engine
4	Engine oil filter
5	Reserve tank
6	Oil cooler
7	Air cleaner
8	Hydraulic tank
9	Air breather
10	Hydraulic oil line filter
11	Hydraulic oil suction filter

Overall view D

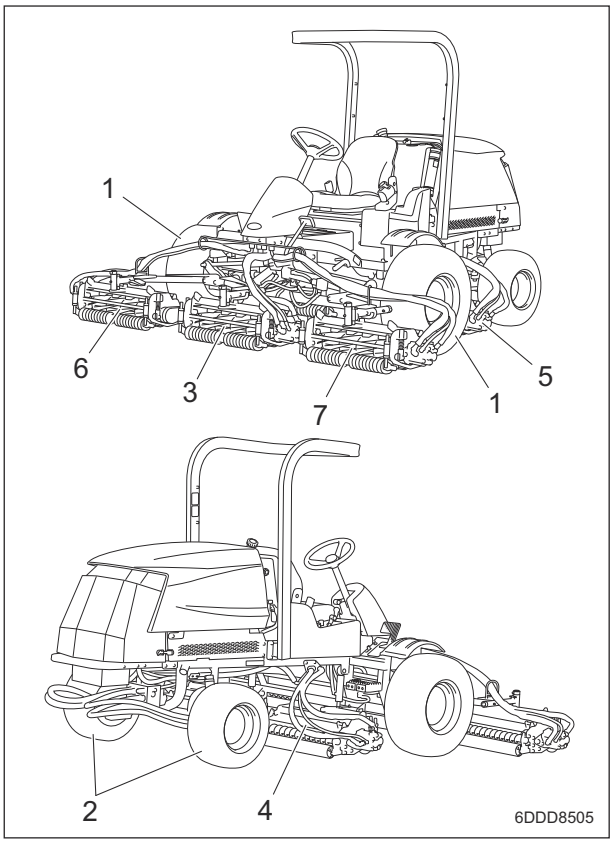

6DDD8505

1	Front tire
2	Rear tire
3	Mower unit #1
4	Mower unit #2
5	Mower unit #3
6	Mower unit #4
7	Mower unit #5

Operation panel

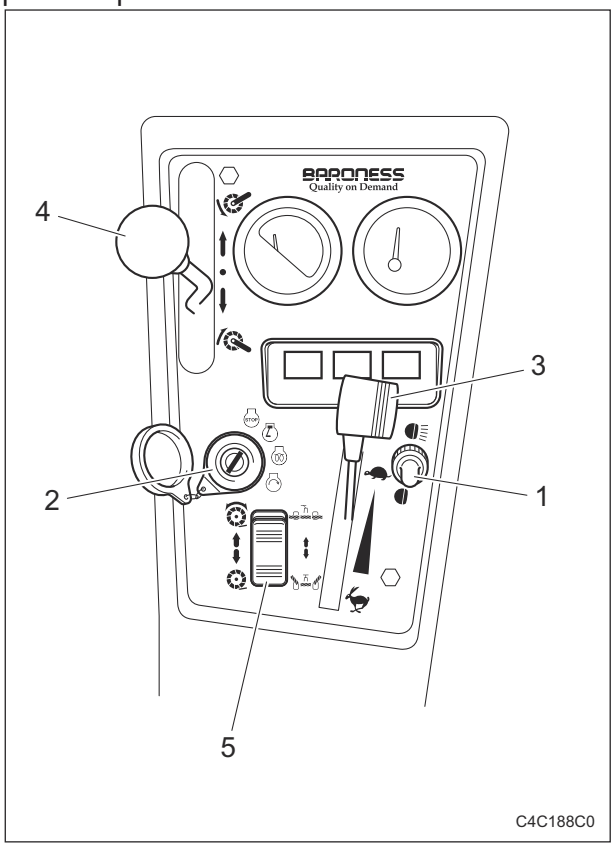

C4C188C0

1	Light switch
2	Key switch
3	Throttle lever
4	Mower unit up/down lever
5	Reel rotation switch

Regulation Decals

Positions of Regulation Decals

[JP]

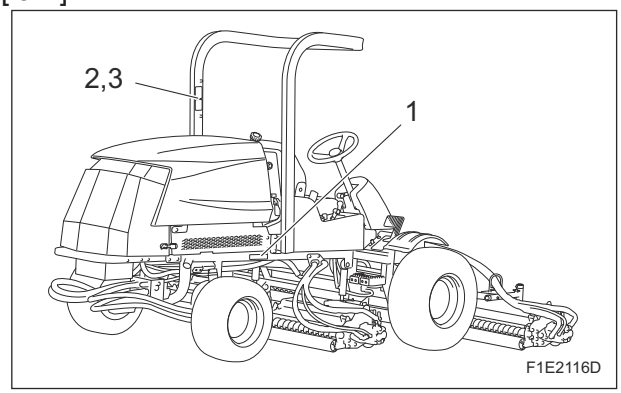

F1E2116D

1	Serial number plate
2	ROPS compliance decal
3	ROPS caution decal

[GB]
Main vehicle

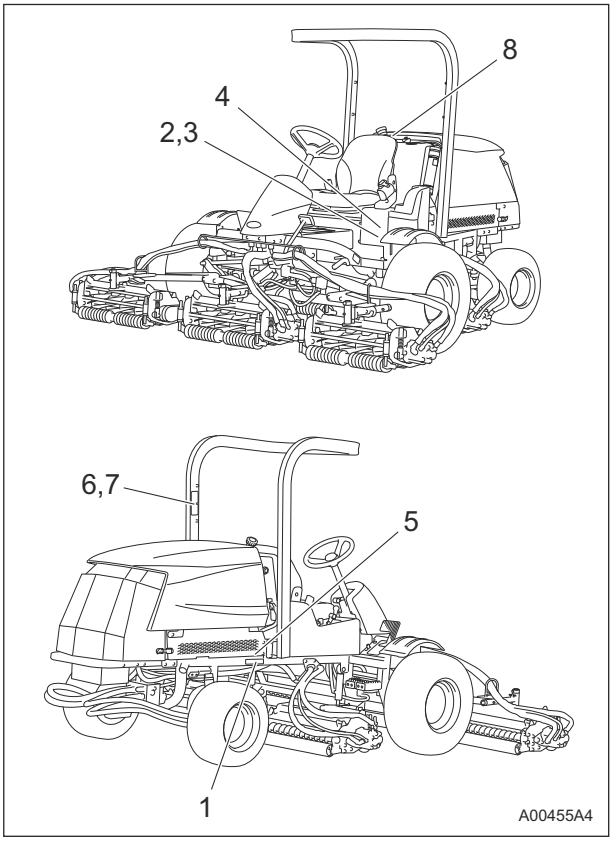

A00455A4

1	Serial number plate
2	Specification decal
3	CE Mark
4	Noise emission decal
5	Year of manufacture decal
6	ROPS compliance decal
7	ROPS caution decal
8	Diesel instruction decal

Battery

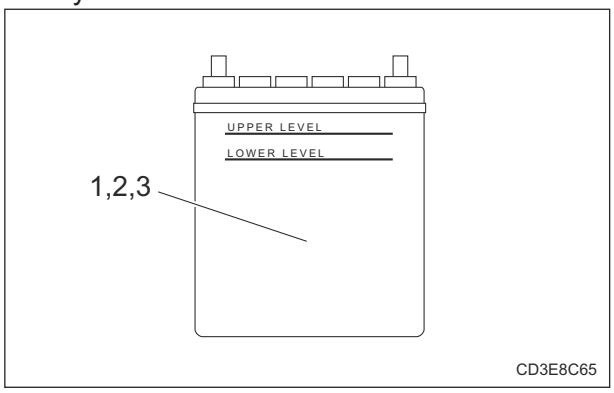

CD3E8C65

1	Battery capacity decal
2	EU battery regulation decal
3	Recycle decal

[US]
Main vehicle

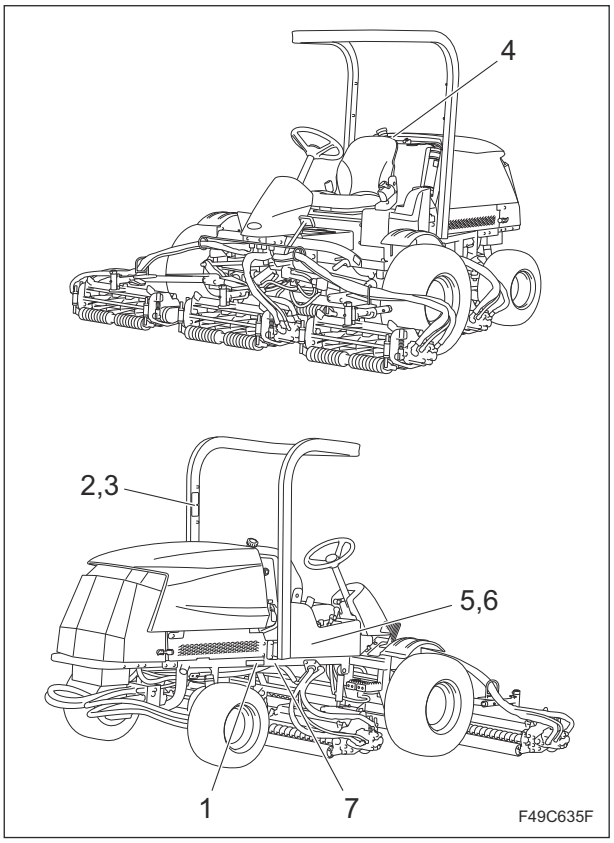

F49C635F

1	Serial number plate
2	ROPS compliance decal
3	ROPS caution decal
4	Diesel instruction decal
5	California Proposition 65 decal (riding type)
6	Spark arrester warning decal
7	ISED compliance decal (#10156-)

Battery

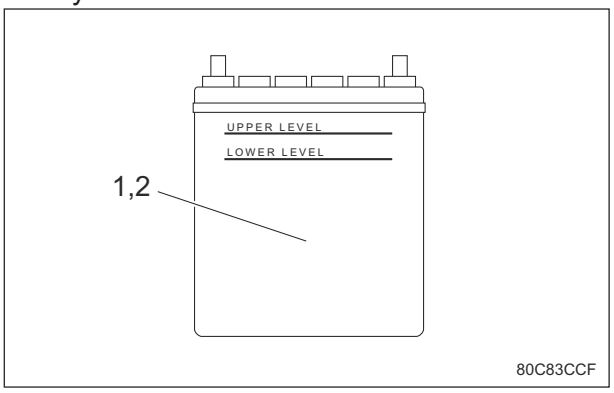

80C83CCF

1	Recycle decal
2	Battery danger decal

Product Overview

Description of Regulation Decals

Serial Number Plate

The serial number plate has the following information.

1. Model
2. Serial number
3. Registered trademark
4. Manufacturer
   - Company name
   - Postal address/Address
   - Website
     Contact the manufacturer via the contact form on the website.

FC7FDECD

Specification Decal

(For EU)
The Specification decal indicates the model and weight, etc.

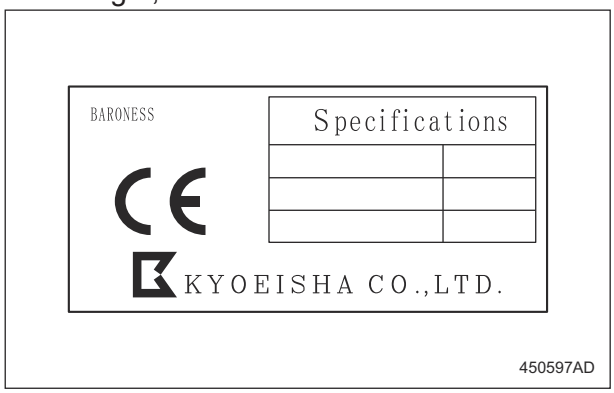

450597AD

CE Mark

(For EU)
CE mark indicates that the machine sold in the EU nations complies with the EU requirements.

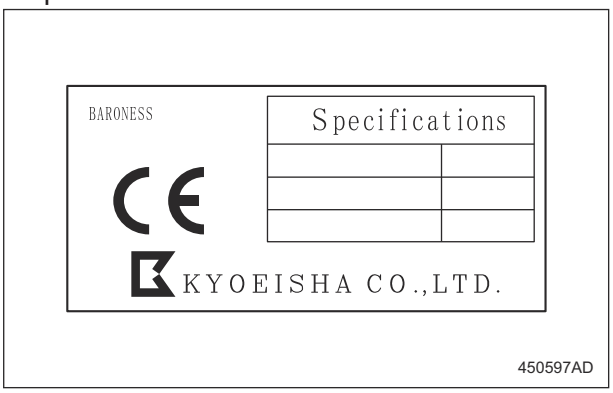

450597AD

Noise Emission Decal

(For EU)
The noise emission decal indicates the sound power level determined by measuring identical machines in accordance with the procedure specified in the regulations of EU.

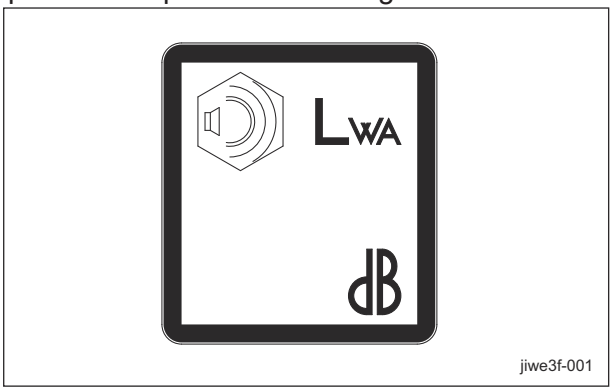

jiwe3f-001

Year of Manufacture Decal

(For EU)
The year of manufacture decal indicates the year when this machine was manufactured.

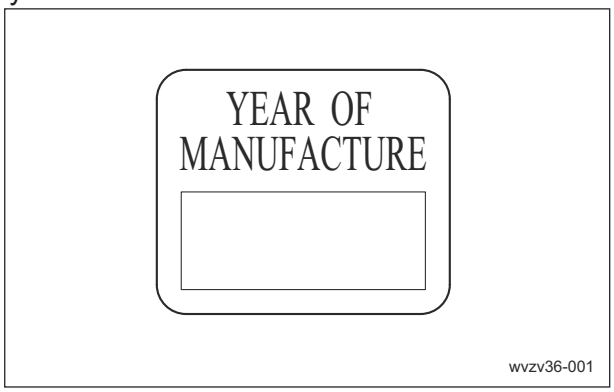

wvzv36-001

ROPS Compliance Decal

The ROPS compliance decal indicates the manufacturer, model, etc., in accordance with International Standard ISO 21299:2009.

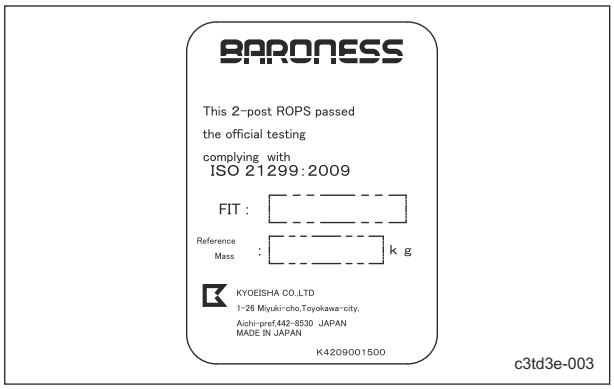

c3td3e-003

ROPS Caution Decal

ROPS caution decal describes the following caution messages.

・Replace damaged ROPS.
・Do not repair or revise.

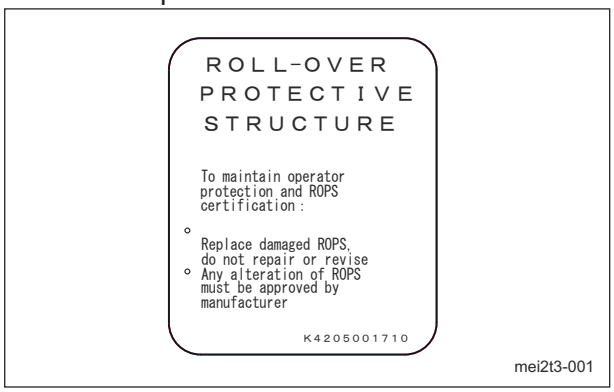

mei2t3-001

Indicating Diesel Fuel Decal

(for USA)
It indicates the fuel to be used.
Use low sulfur or ultra-low sulfur diesel fuel (sulfur-free diesel fuel).

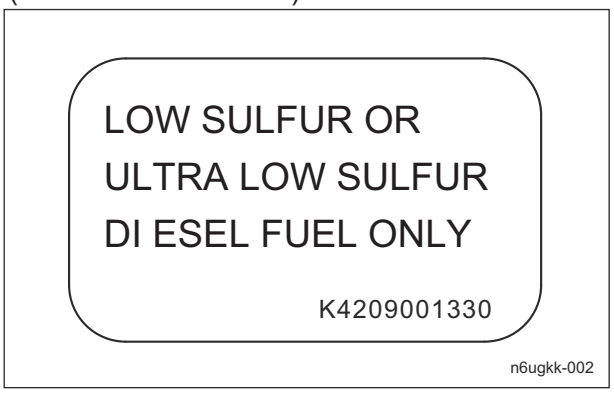

n6ugkk-002

California Proposition 65 Decal (Riding Type)

(For the State of California, USA)
California Proposition 65 decal describes the warning messages as required by California Proposition 65.

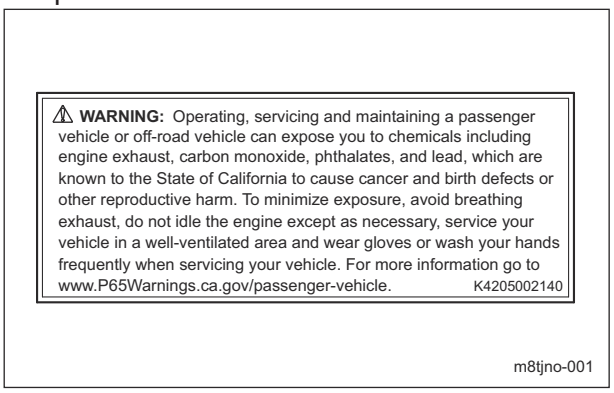

m8tjno-001

Spark Arrester Warning Decal

(For the State of California, USA)
Spark arrester warning decal describes the warning messages as required by California Public Resources Code.

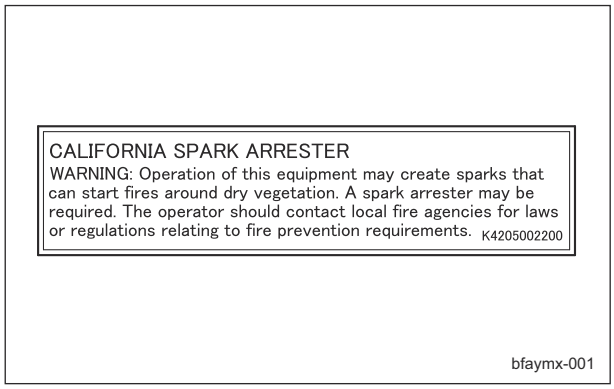

bfaymx-001

ISED Compliance Decal

(For Canada)
The ISED compliance decal indicates that the product marketed in Canada meets Canadian standard.

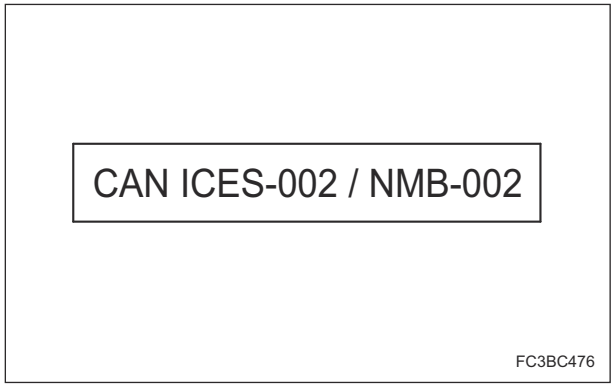

FC3BC476

Battery Capacity Decal

(For EU)
The battery capacity decal indicates the capacity by 20HR and CCA.

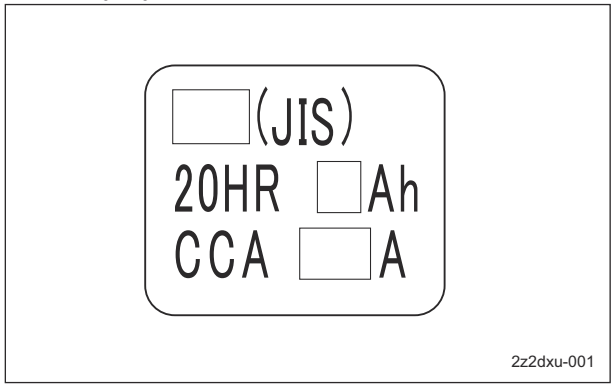

2z2dxu-001

EU Battery Regulation Decal

(For EU)
The EU battery regulation decal indicates compliance with the EU battery regulation.

1. The following information about the battery manufacturing company is written in the decal.
   - Company name
   - Address
   - Website URL
2. You can scan the QR code with your smartphone to access the corresponding battery information.
   (*QR Code is a registered trademark of DENSO WAVE INCORPORATED.)
3. CE mark indicates that the battery installed in a machine sold in the EU nations complies with the EU requirements.

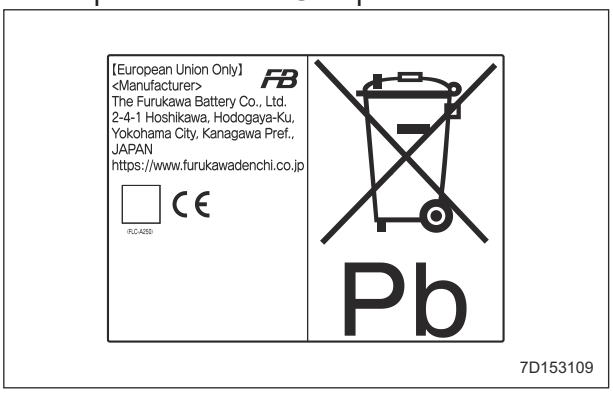

7D153109

Recycle Decal

Recycle Decal illustrates Recycle Mark in accordance with local regulation.
(For EU)

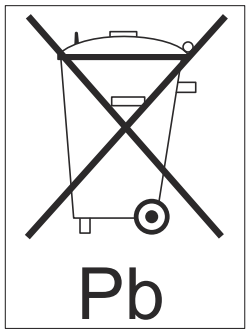

y7wov5-001

y7wov5-001

(For USA)

y7wov5-002

y7wov5-002

Battery Danger Decal

(For USA)
Battery Danger Decal describes handling precautions for battery.

wsi57s-001

wsi57s-001

Safety Signs and Instruction Signs

About Safety Signs and Instruction Signs

Important

Safety decals and instruction decals are attached to this product.
Make sure that they are preserved in their entirety. If they are damaged, become dirty, or peel off, replace them with new ones.

Part numbers for decals that need to be replaced are listed in the parts catalog. Order them from a Baroness dealer or Kyoeisha.

Positions of Safety Decals and Instruction Decals

[JP]

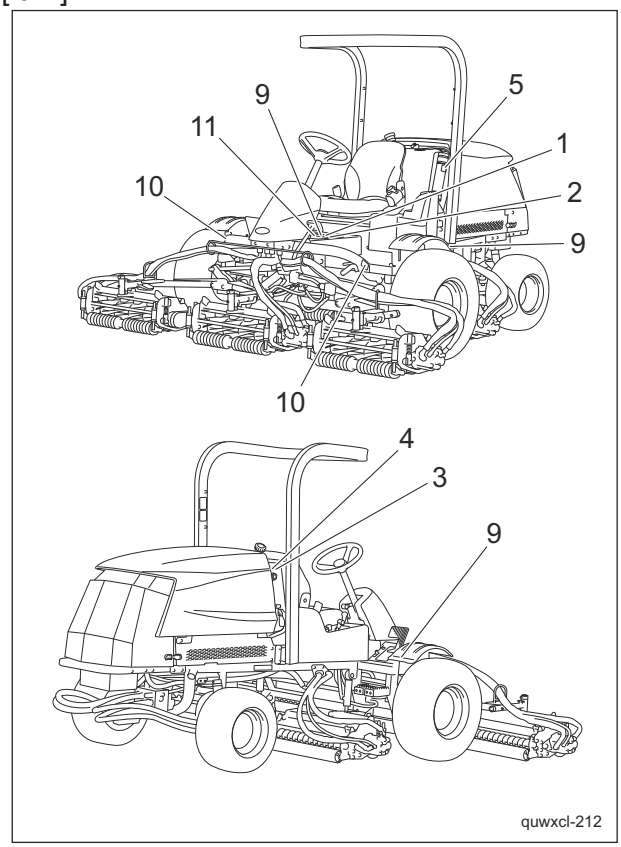

quwxcl-212

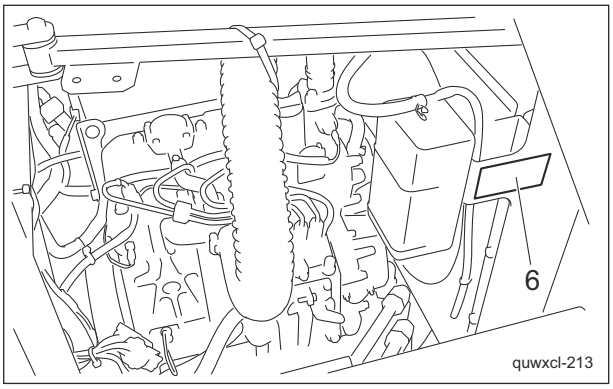

quwxcl-213

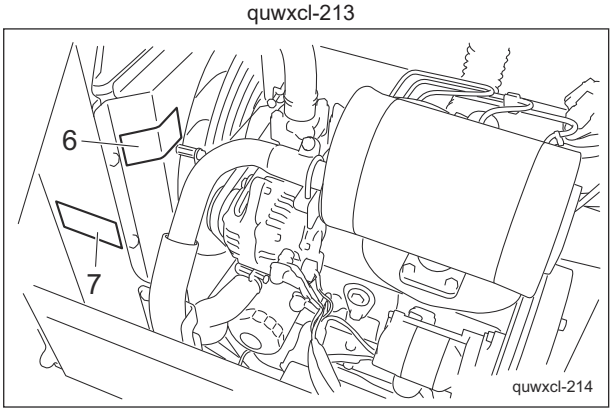

quwxcl-214

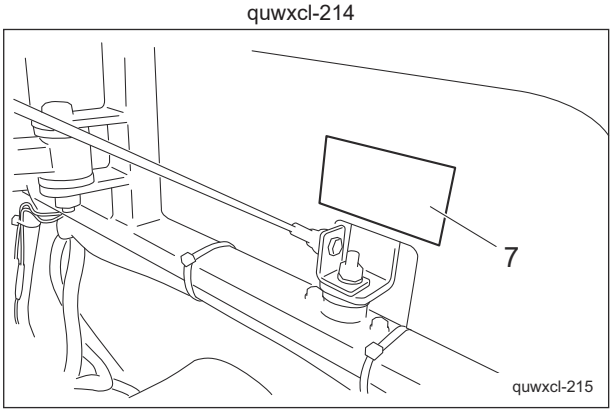

quwxcl-215

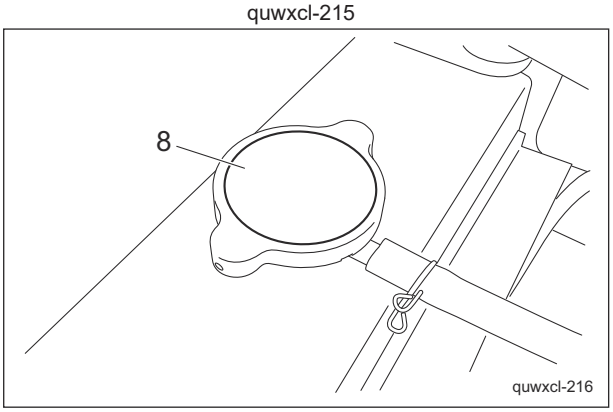

quwxcl-216

1	Operation decal 2
2	Hydraulic oil decal
3	Diesel fuel filler port decal
4	Fire prohibited decal
5	Decal on reading owner's operating manual (#10001 - 10075)
6	Caution to rotating object decal
7	Caution to hot parts decal
8	Caution for spouting coolant decal
9	DO NOT STEP caution decal
10	Caution for mower lock decal
11	Prohibited drive at public road decal (-#10185)

[GB]
[US]

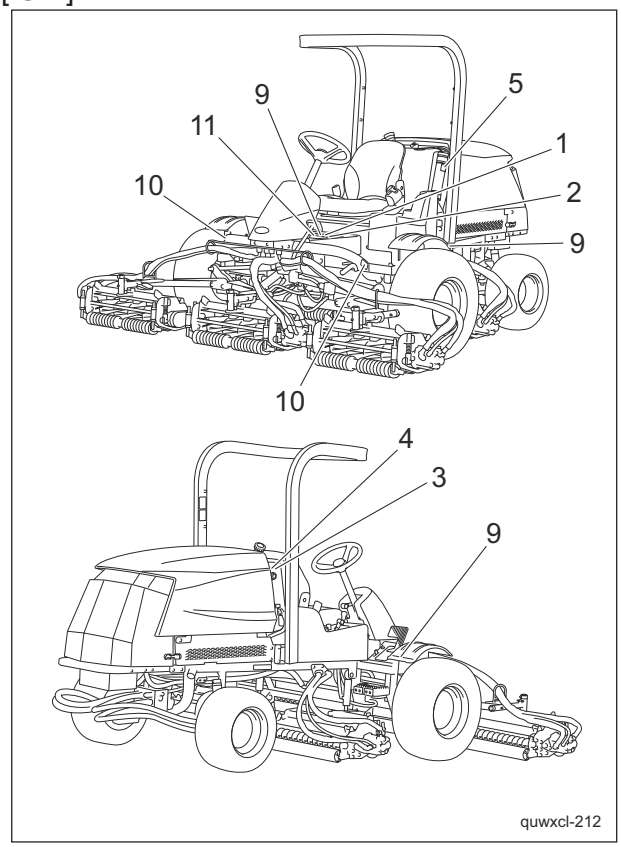

quwxcl-212

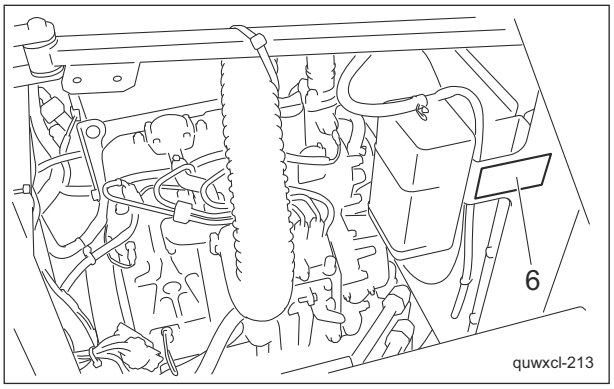

quwxcl-213

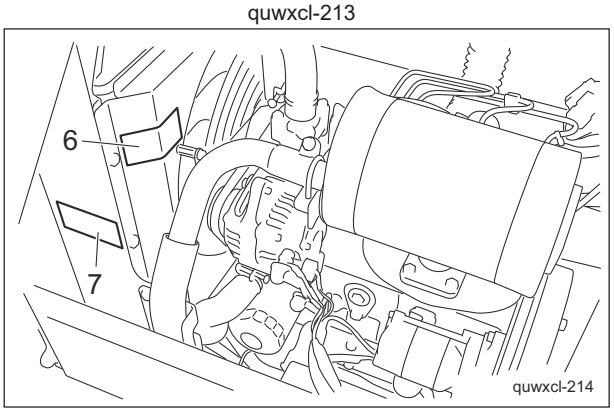

quwxcl-214

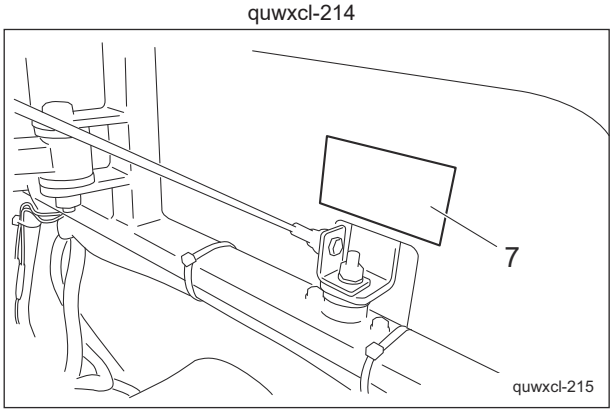

quwxcl-215

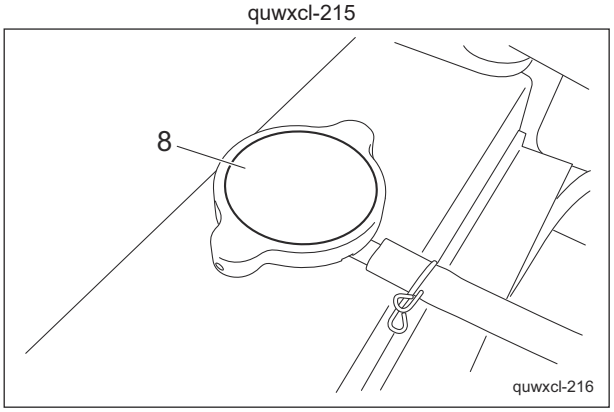

quwxcl-216

1	Operation decal 2
2	Hydraulic oil decal
3	Diesel fuel filler port decal
4	Fire prohibited decal
5	Decal on reading owner's operating manual (#10001-10075)
6	Caution to rotating object decal
7	Caution to hot parts decal
8	Caution for spouting coolant decal
9	DO NOT STEP caution decal
10	Caution for mower lock decal
11	Caution to noise decal

Description of Safety Decals and Instruction Decals

Decal for Operation 2

Decal for operation 2
LM2400-0918Z0

1.

Warning

Read the Owner's Operating Manual.

2.

Warning

Apply the parking brake, stop the engine, remove the ignition key, and then leave the machine.

3.

Caution

Thrown objects - Be sure that people around the machine keep a safe distance away.

4.

Warning

May cut your hand or leg - Keep hands and feet away from moving parts.

5.

Warning

Be careful of exhaust emissions.

6.

Caution

Rollover - Do not work on slopes of 15 degrees or more.
When you descend a slope, lower the mower units and then drive at low speed.
For ROPS equipped machine, fasten your seatbelt.

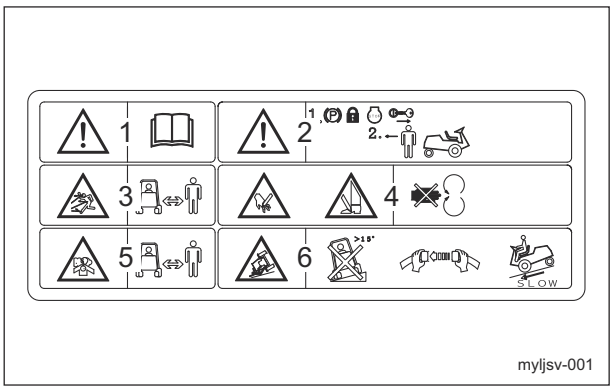

myljsv-001

Hydraulic Oil Decal

K4209001390
Decal, hydraulic oil
Read the owner's operating manual.

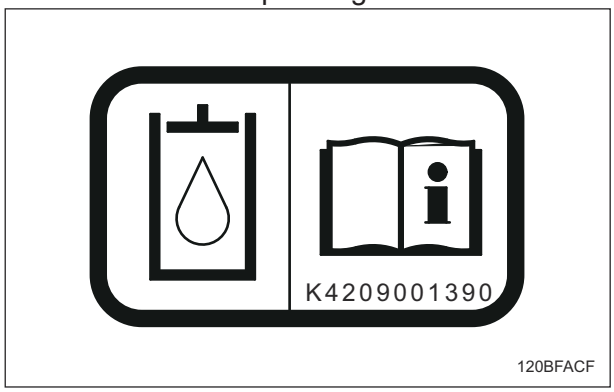

120BFACF

Diesel Fuel Filler Port Decal

K4209001000
DECAL, DIESEL OIL FILLER PORT
Use diesel fuel.

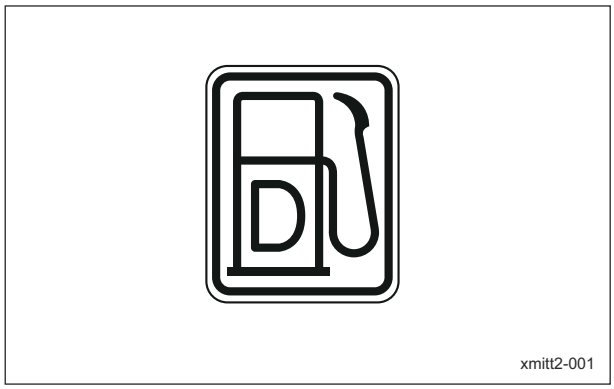

xmitt2-001

Fire Prohibited Decal

K4205001940
Decal, fire prohibited

Warning

Keep away from fire.

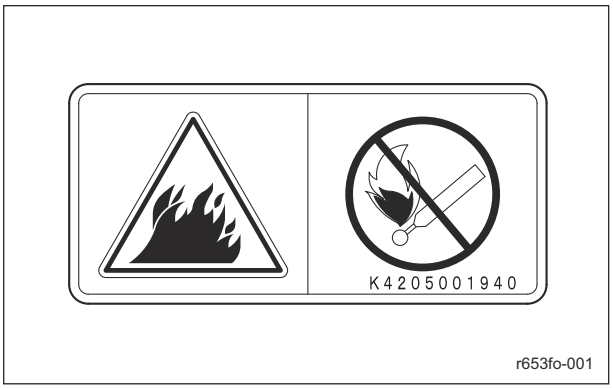

r653fo-001

Decal on Reading Owner's Operating Manual

K4205001560
Decal, read Owner's Operating Manual

Warning

Read the Owner's Operating Manual.

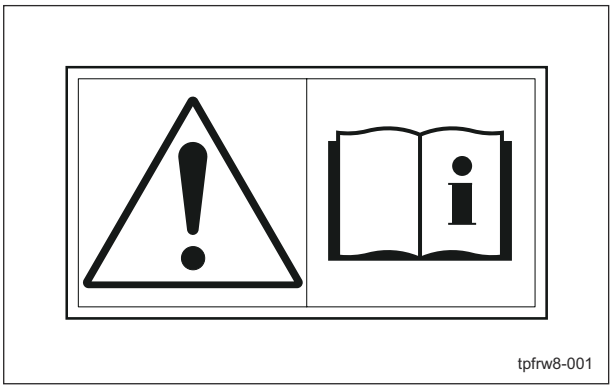

tpfrw8-001

Caution to Rotating Object Decal

K4205001530
Decal, caution to rotating object

Warning

Watch for rotating parts - Keep your hands away from the belts while the engine is running.

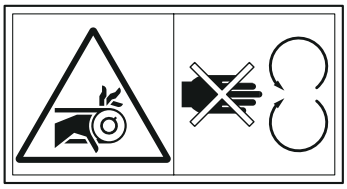

qwsqzx-001

Caution to Hot Parts Decal

K4205001540
Decal for caution to hot parts

Caution

High temperature - Do not touch. Otherwise, you will get burned.

xekv4l-001

Caution for Spouting Coolant Decal

K4205001970
Decal, caution for spouting coolant

Caution

Caution for spouting coolant - Do not open while hot.
High temperature - Do not touch. Otherwise, you will get burned.

pwb8d2-001

DO NOT STEP Caution Decal

K4209001340
Decal, caution "DO NOT STEP"

Caution

Do not step.

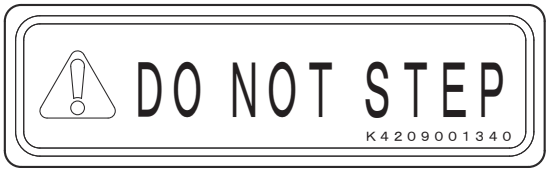

tg45gw-001

Caution for Mower Lock Decal

K4205001900
Decal, caution for mower lock
Lock the mower units when traveling or storing with the mower units #4 and 5 raised.

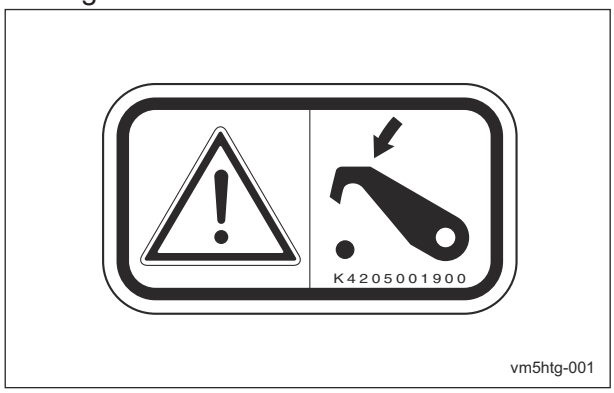

vm5htg-001

Prohibited Drive at Public Road Decal

[JP]
K4205001660
Decal, not to drive at public road

46m131-001

Caution to Noise Decal

K4205001330
DECAL, CAUTION TO NOISE

bwu9po-001

Operation Decals

Positions of Operation Decals

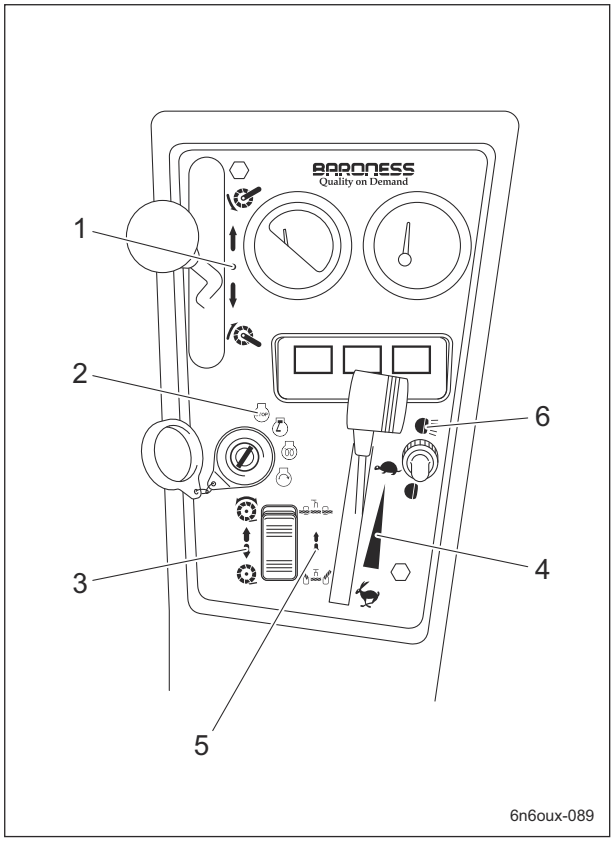

6n6oux-089

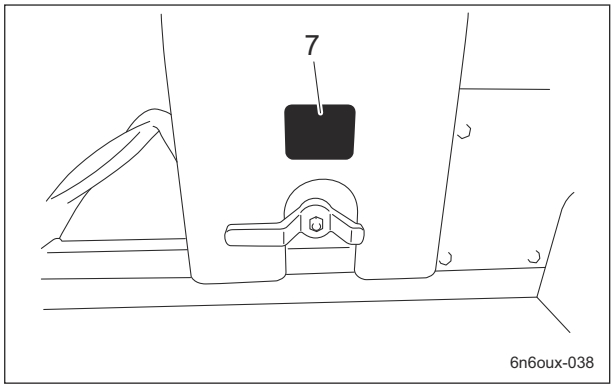

6n6oux-038

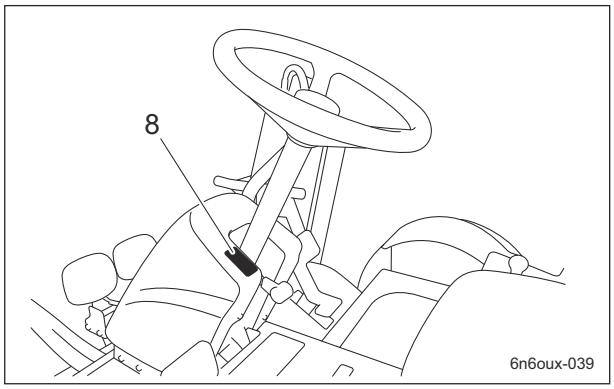

6n6oux-039

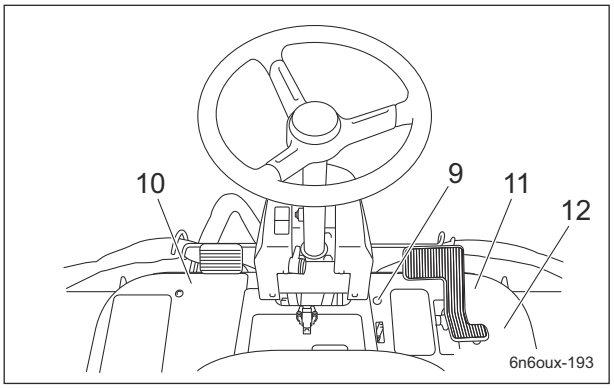

6n6oux-193

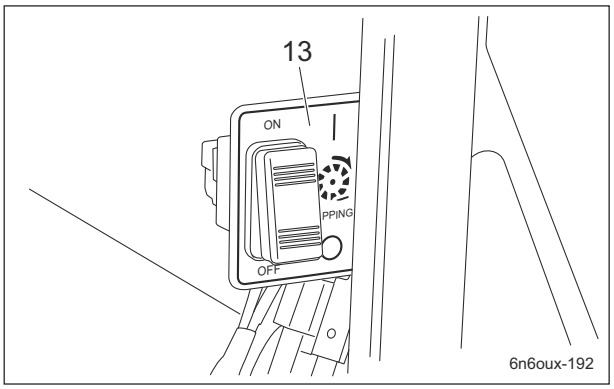

6n6oux-192

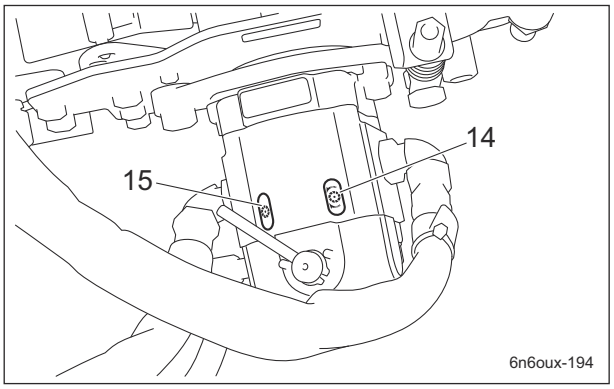

6n6oux-194

1	Mower unit up/down decal
2	Key switch decal
3	Reel rotation mark
4	Engine rotation mark
5	Traveling/working selector mark
6	Light switch mark
7	Stop valve operation decal
8	Tilt steering decal
9	Brake mark
10	BRAKE decal
11	FORWARD decal
12	BACKWARD decal
13	Lapping switch decal
14	Reel rotation decal
15	Reel stop decal

Description of Operation Decals

Mower Unit Up/Down Mark

Mower unit up/down mark
This indicates the Up/Down positions of the mower unit.

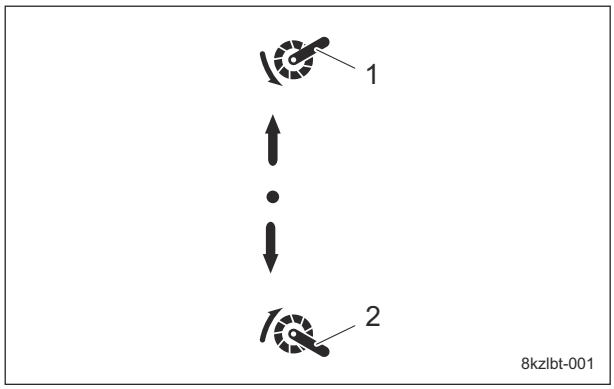

8kzlbt-001

1	Down
2	Up

Key Switch Mark

Key switch mark
This indicates the key switch positions.

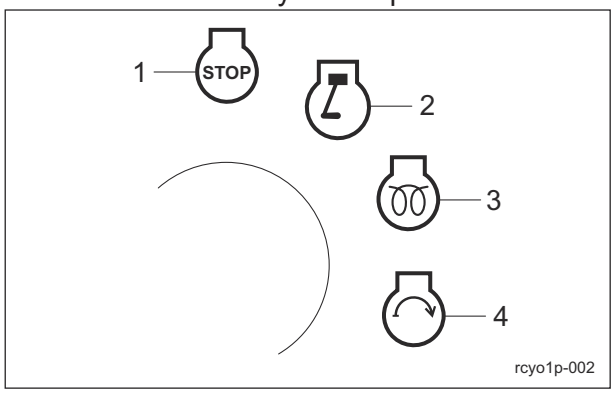

rcyo1p-002

1	OFF
2	ON
3	GLOW
4	START

Reel Rotation Mark

Reel rotation mark
It illustrates Rotation/Stop of the reel cutter (cutting cylinder).

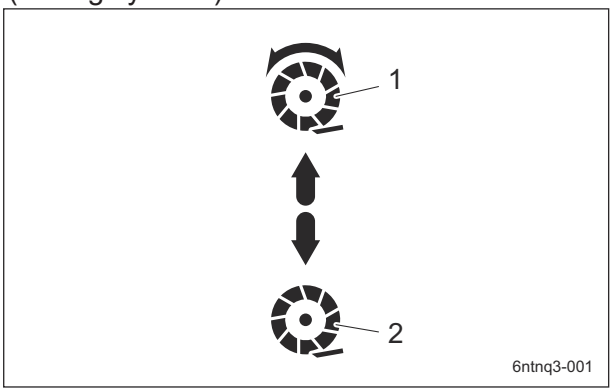

6ntnq3-001

1	Rotation
2	Stop

Engine Rotation Mark

Engine rotation mark
This indicates high/low speed of the engine rotation.

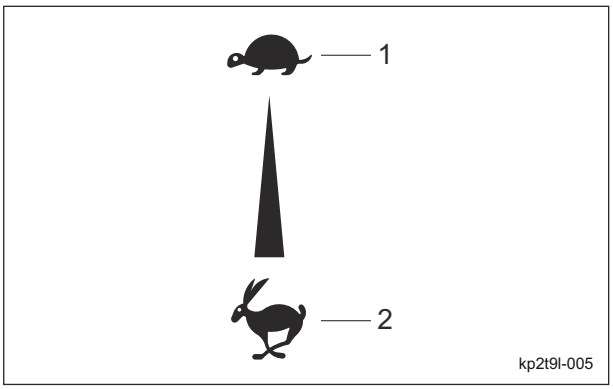

kp2t9l-005

1	Low speed
2	High speed

Traveling/Working Selector Mark

Traveling/working selector mark
It illustrates the positions where mower units #4 and #5 stop when they are raised.
(ON/OFF of slight lift function)

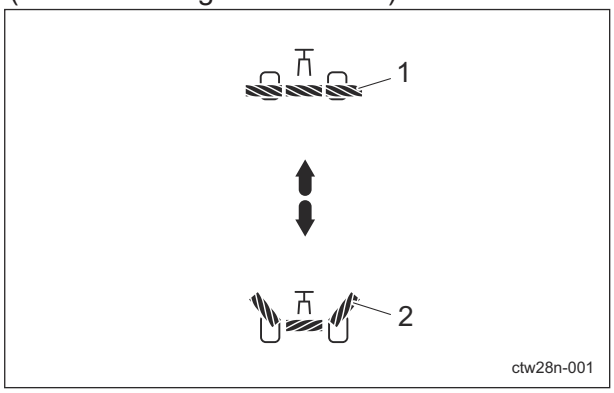

ctw28n-001

1	Working
2	Traveling

Light Switch Mark

Note:
Depending on the specifications, this function may not be available.
Light switch mark
It illustrates ON/OFF of the light.

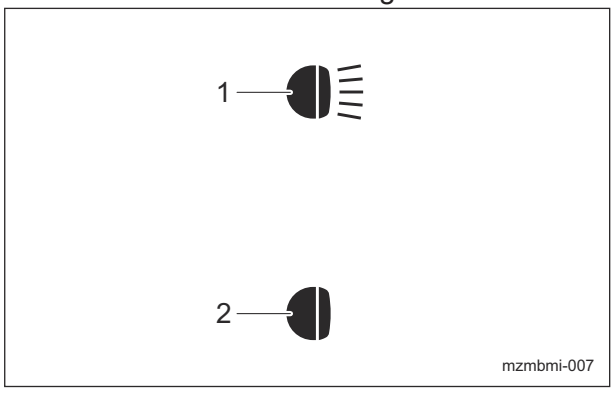

mzmbmi-007

1	ON
2	OFF

Stop Valve Operation Decal

K4203001290
Stop valve operation decal
It illustrates Stop/Open of the stop valve.

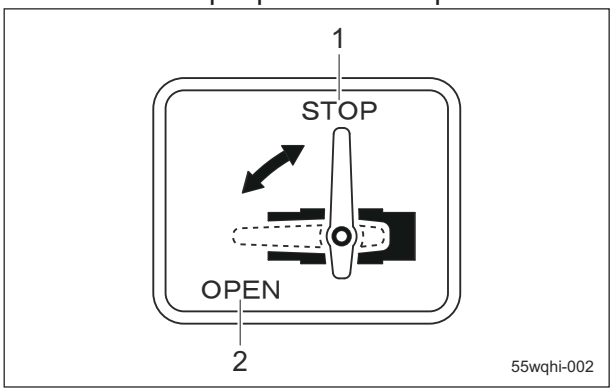

55wqhi-002

1	Stop
2	Open

Tilt Steering Decal

K4203001560
Decal, tilt steering
This illustrates the tilt directions of the steering wheel and the locked/free positions.

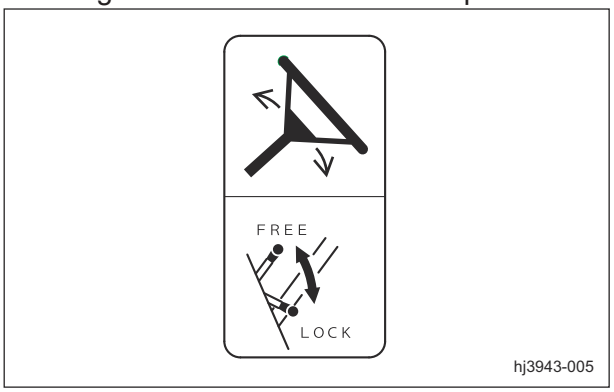

hj3943-005

Brake Mark

K4209001200
DECAL, BRAKE
It illustrates the locking position for the parking brake.

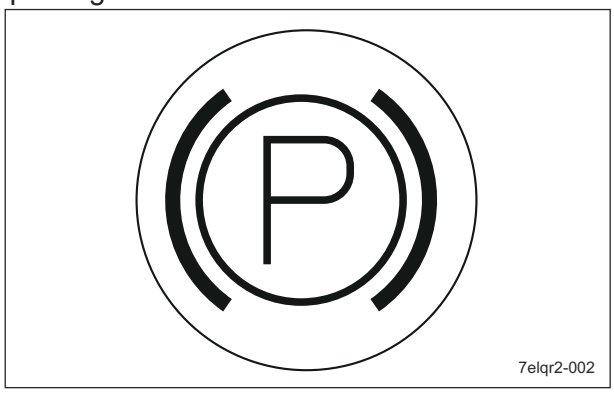

7elqr2-002

BRAKE Decal

K4203001450
Decal, BRAKE
This indicates brake.

7elqr2-001

FORWARD Decal

K4203001430
Decal, FORWARD
This indicates forward travel.

kqca3e-001

BACKWARD Decal

K4203001440
Decal, BACKWARD
This indicates backward travel.

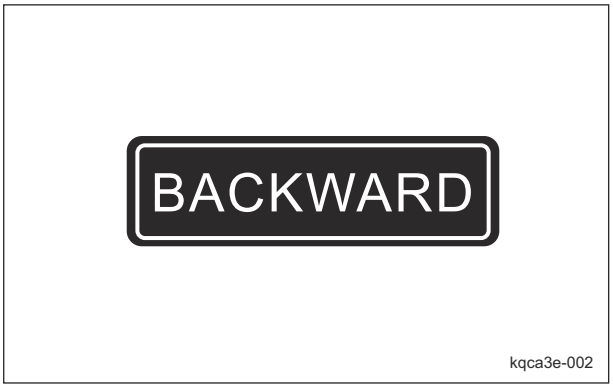

kqca3e-002

Lapping Switch Decal

K4203001580
Decal, lapping switch
This indicates ON/OFF switching of back lapping operation.

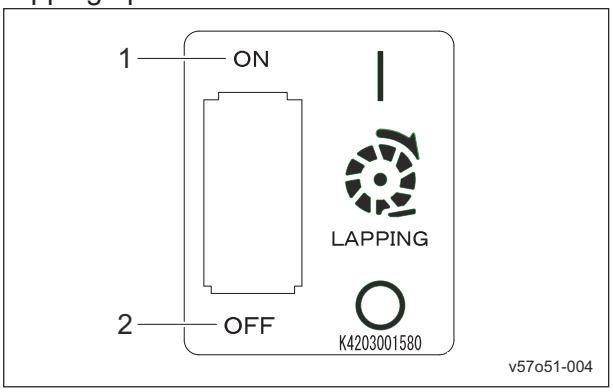

v57o51-004

1	Reverse rotation (back lapping rotation)
2	Normal rotation (cutting rotation)

Reel Rotation Decal

K4203001300
Decal, reel rotation
This indicates rotation of the reel cutter (cutting cylinder).

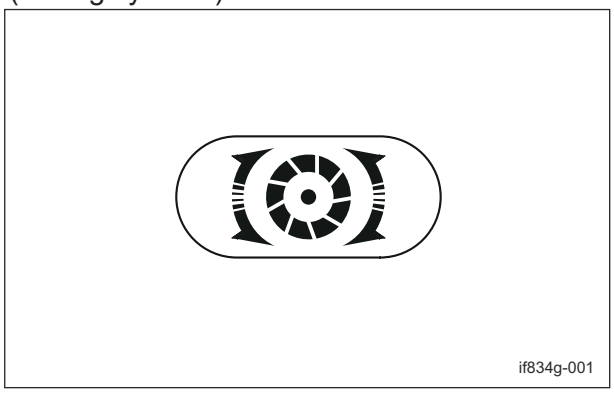

if834g-001

Reel Stop Decal

K4203001310
Decal, reel stop
This indicates stop of the reel cutter (cutting cylinder).

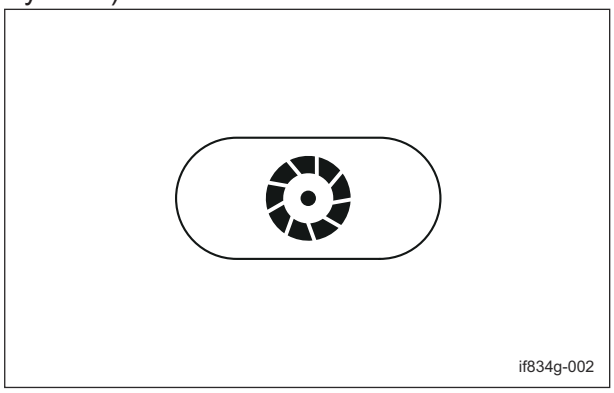

if834g-002

Description of Functions

Light Switch ..... Page 4-2

Key Switch .....Page 4-2

Throttle Lever .....Page 4-2

Mower Unit Up/Down Lever ..... Page 4-3

Stop Valve .....Page 4-3

Mower Lock Lever (Latch) ..... Page 4-4

Reel Rotation Switch .....Page 4-4

Slight Lift Function ..... Page 4-4

Reel Reverse Switch .....Page 4-5

Reel Rotation/Stop Switching Lever .... Page 4-5

Traveling Pedal ..... Page 4-5

Pedal Stopper .....Page 4-6

Brake Pedal ..... Page 4-6

Parking Brake Lock Lever .....Page 4-6

USB Socket ..... Page 4-7

Instruments on The Operation Panel ..... Page 4-7

Water Temperature Gauge ..... Page 4-8
Fuel Gauge .....Page 4-8
Pilot Lamps .....Page 4-8
Hour Meter .....Page 4-9

Safety Device ..... Page 4-10

Interlock System ..... Page 4-10

Warning Mechanisms .....Page 4-10

Warning Buzzer ..... Page 4-10

Description of Functions

Light Switch

Caution

The lights provide auxiliary lighting.
Do not travel or operate the machine at night or under poor visibility.

Note:
Depending on the specifications, this function may not be available.
Use the light switch to switch between "ON" and "OFF" of the light.

1. Set the light switch to the "ON" position to turn on the LED light.
2. Set the light switch to the "OFF" position to turn off the LED light.

Note:
The lights will not turn on when the ignition key is switched to the "OFF" position.

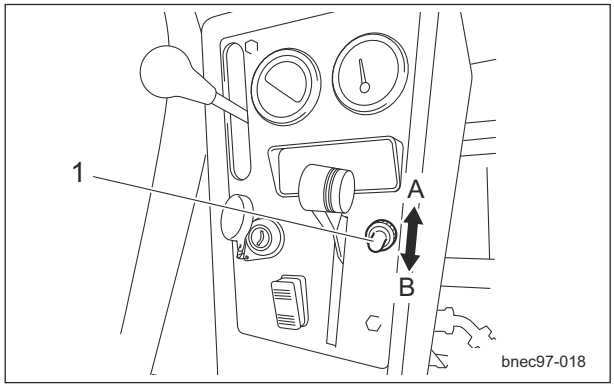

bnec97-018

1	Light switch
A	ON
B	OFF

Key Switch

The key switch is a lock for inserting the ignition key.
This is used for starting, running or stopping the engine by turning the ignition key to change the key switch position.

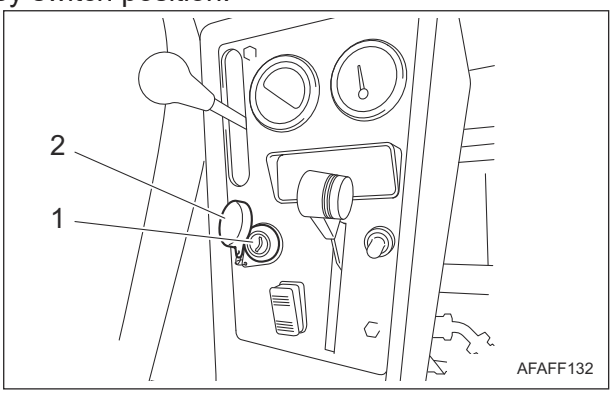

AFAFF132

1	Key switch
2	Cap

Throttle Lever

Use the throttle lever to adjust the engine rpm.

1. Shift the throttle lever to the "High speed" position to increase the engine rpm.
2. Shift the throttle lever to the "Low speed" position to reduce the engine rpm.

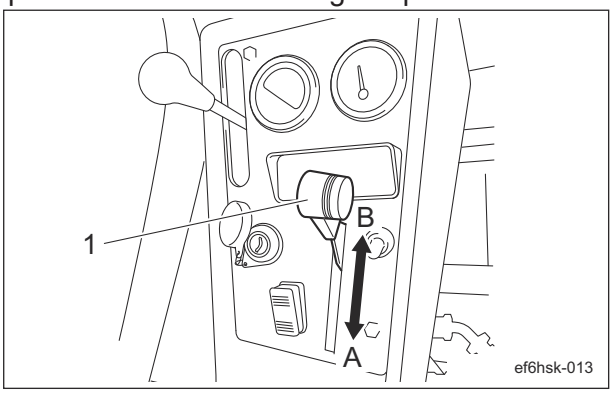

ef6hsk-013

1	Throttle lever
A	High speed
B	Low speed

Mower Unit Up/Down Lever

Caution

Before raising or lowering the mower units, make sure that there are no people around the machine.

Caution

Be careful since shifting the mower unit up/down lever to the "DOWN" position lowers the mowers, even while the engine is stopped.

Important

Before operating the mower unit up/down lever, be sure to set the stop valve to the "Open" position.

Important

When the mower lock levers (latches) are engaged, do not operate the mower unit up/down lever.

The mower unit up/down lever raises or lowers the mower units.

1. Shift the lever to the "DOWN" position to lower all the mower units.
2. Shift the lever to the "UP" position to raise all the mower units.

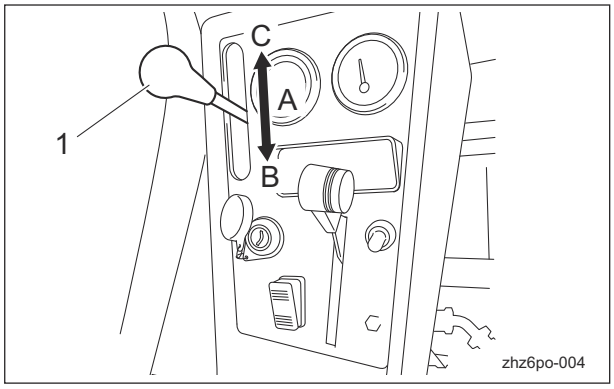

zhz6po-004

1	Mower unit up/down lever
A	Neutral
B	Up
C	Down

Note:
Even if the reel rotation switch is set to the "Rotate" position, the reel cutter (cutting cylinder) stops rotating when the mower unit up/down lever is moved to the neutral position or the mower units are raised.

Stop Valve

Caution

When you move the machine or when you stop the engine with the mower units raised, be sure to set the stop valve to the "Stop" position.

Stop valve prevents all raised mower units from falling.
Setting the stop valve to the "Stop" position while the mower units raised keeps the mower units in the raised position.
Setting the stop valve to the "Stop" position while the mower units lowered keeps the mower units in the lowered position.
Note:
When the stop valve is set to the "Stop" position, mower units will not be raised or lowered even if mower unit up/down lever is operated.

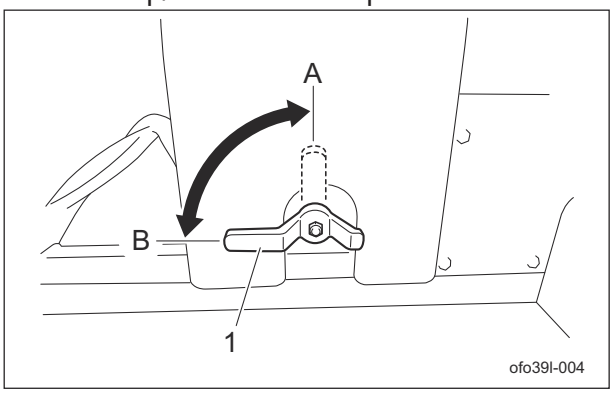

ofo39l-004

1	Stop valve
A	Stop
B	Open

Mower Lock Lever (Latch)

Hook the mower lock levers (latches) on the arms to maintain the mower units #4 and #5 raised.
Use the mower lock levers (latches) for the following operations.

- Moving by the machine
- Transporting the machine
- Storing the machine

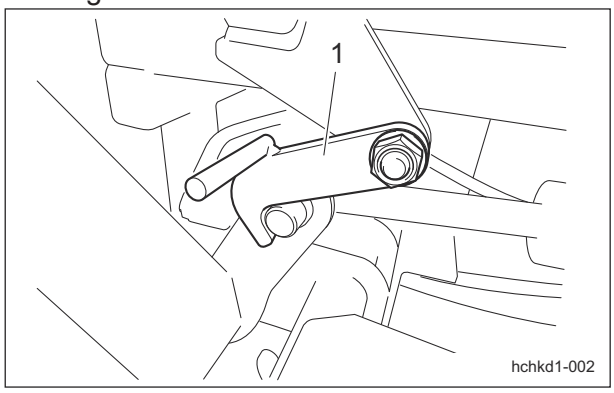

hchkd1-002

1	Mower lock lever (latch)

Reel Rotation Switch

Caution

The reel rotation switch must be set to the "Rotate" position just before you start cutting work.
It must be set to the "Stop" position except when cutting work.

The reel rotation switch operates rotation of the reel cutters (cutting cylinders) of the mower units.

1. Set the reel rotation switch to the "Rotate" position to rotate the reel cutters (cutting cylinders).
2. Set the reel rotation switch to the "Stop" position to stop rotating the reel cutters (cutting cylinders).

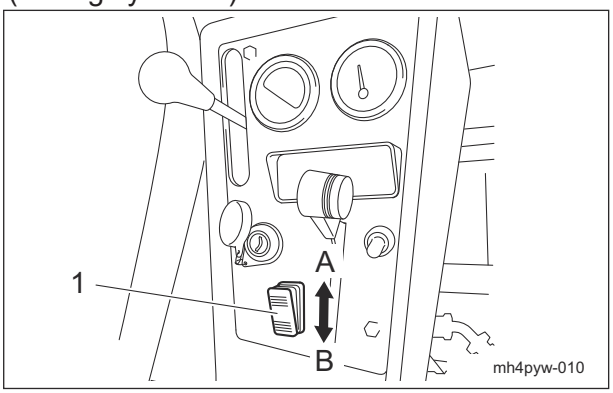

mh4pyw-010

1	Reel rotation switch
A	Rotate
B	Stop

Slight Lift Function

When the reel rotation switch is shifted to the "Rotate" side, the slight lift becomes functional and the mower units are raised only to a fixed height when the mower units are raised with the mower unit up/down lever.

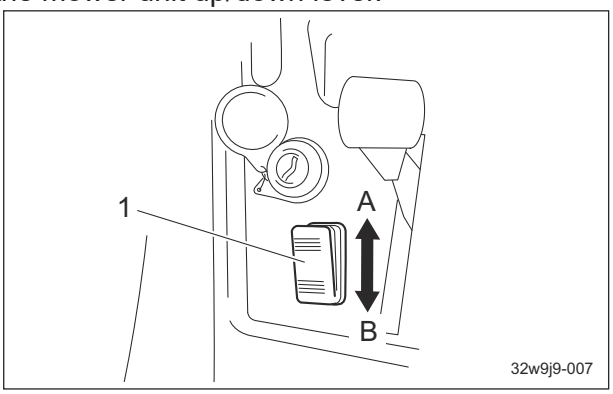

32w9j9-007

1	Reel rotation switch
A	Rotate (Slight lift function "ON")
B	Stop (Slight lift function "OFF")

Reel Reverse Switch

Important

Do not switch the reel reverse switch to the "ON" or "OFF" position while the reel cutter (cutting cylinder) is rotating.
Otherwise, a hydraulic system will malfunction.

Important

If the reel rotation switch is not set to the "Rotate" position, the reel cutter (cutting cylinder) will not rotate.

The reel reverse switch switches the rotation direction of the reel cutters (cutting cylinders). When the reel reverse switch is set to the "Reverse rotation" position, the reel cutters (cutting cylinders) of all mower units rotate in reverse (back lapping rotation). When the reel reverse switch is set to the "Normal rotation" position, the reel cutters (cutting cylinders) rotate for mowing.

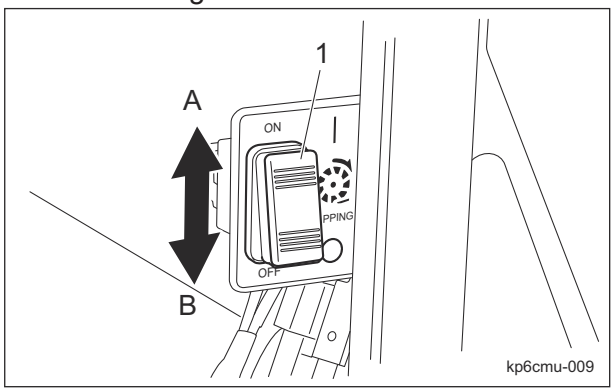

kp6cmu-009

1	Reel reverse switch
A	Reverse rotation
B	Normal rotation

Reel Rotation/Stop Switching Lever

Caution

Before operating the reel rotation/stop switching lever, be sure to shift the reel rotation switch to the "Stop" position.

The reel rotation/stop switching lever is located on the reel motor attached to each mower unit. It is used during cutting and back lapping.
You must shift only the lever(s) for the mower unit(s) that you plan to use for cutting or back lapping to the "Rotate" position. Leave the lever(s) for other mower units in the "Stop" position.

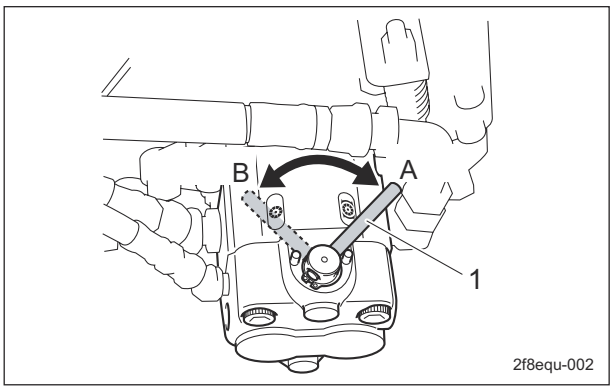

2f8equ-002

1	Reel rotation/stop switching lever
A	Rotate
B	Stop

Traveling Pedal

The traveling pedal is located in the right foot area.
When the forward side depressed, the machine travels forward. When the backward side depressed, the machine travels backward.

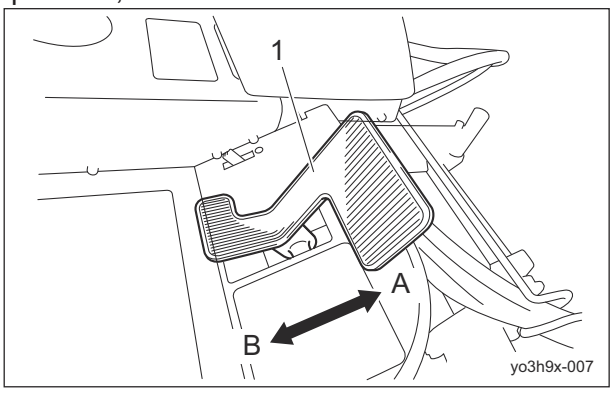

yo3h9x-007

1	Traveling pedal
A	Forward
B	Backward

Pedal Stopper

The pedal stopper is located in the right foot area.
This lever changes the amount that the forward pedal can be depressed.
Be sure to set the pedal stopper to the "Working" position during operation.

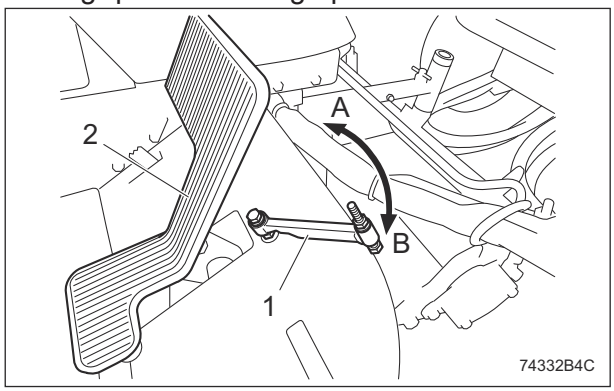

74332B4C

1	Pedal stopper
2	Traveling pedal
A	Working
B	Traveling

Brake Pedal

The brake pedal is used for stopping the machine.
To stop the machine, depress the brake pedal all the way firmly.

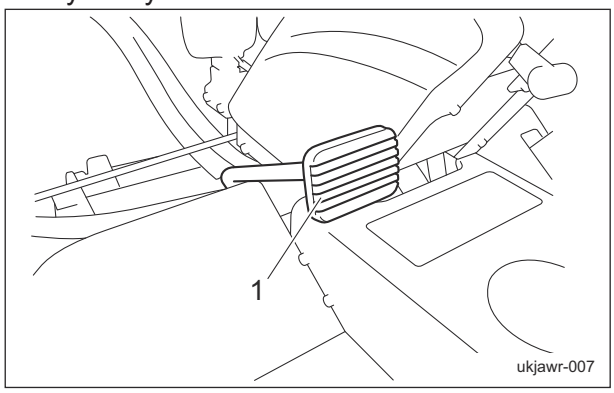

ukjawr-007

1	Brake pedal

Parking Brake Lock Lever

Caution

Never park the machine on a slope.

Important

Be sure to release the parking brake before traveling.
Otherwise, the brake and hydraulic systems will malfunction.

Use the parking brake lock lever to lock the brake pedal with the brake applied to prevent the machine from moving while parked or stopped.

1. Applying the parking brake:
   Depress the brake pedal and move the parking brake lock lever forward.
2. Releasing the parking brake:
   Depress the brake pedal again.

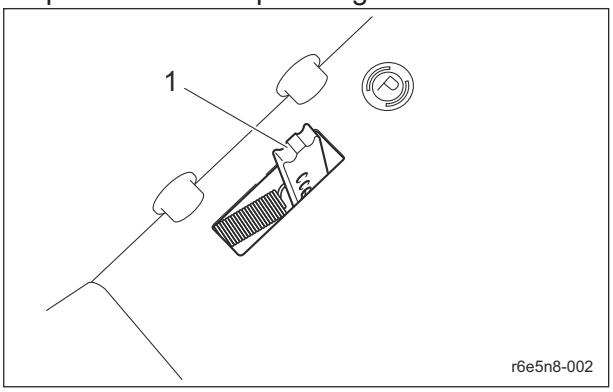

r6e5n8-002

1	Parking brake lock lever

USB Socket

Important

Do not use the USB socket in rainy weather to avoid malfunction of devices.

The USB socket can be used to charge or power devices that can be connected via USB, such as smartphones.
When the ignition key is set to the "ON" position, it is energized and the indicator on the USB port glows blue.

1. Switch the ignition key to the "ON" position.
2. Open the protective cover.

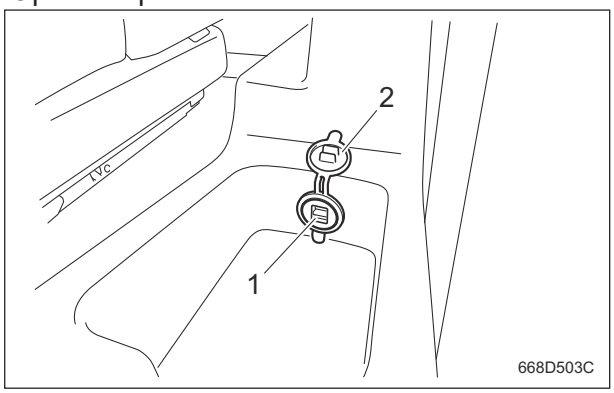

668D503C

1	USB port
2	Protective cover

3. Check the device to be connected.
   ■ #10091-
   The maximum output power is DC5 V 2.1 A Max for each port.
   The shape of the ports is Standard-A (Type-A) for each port.

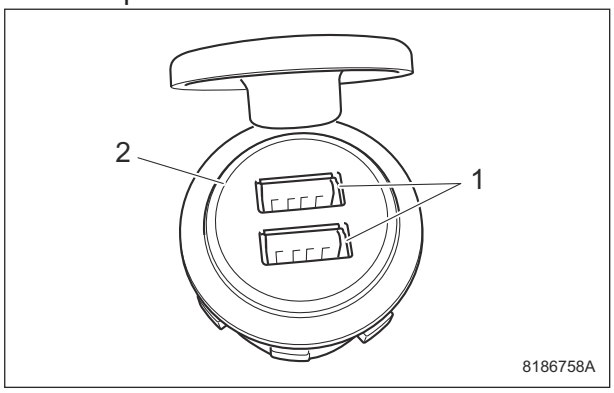

8186758A

1	2.1 A
2	Indicator

4. Insert the USB cable into the USB port.
   The indicator glows blue when energized.
5. Close the protective cover after use.

Instruments on The Operation Panel

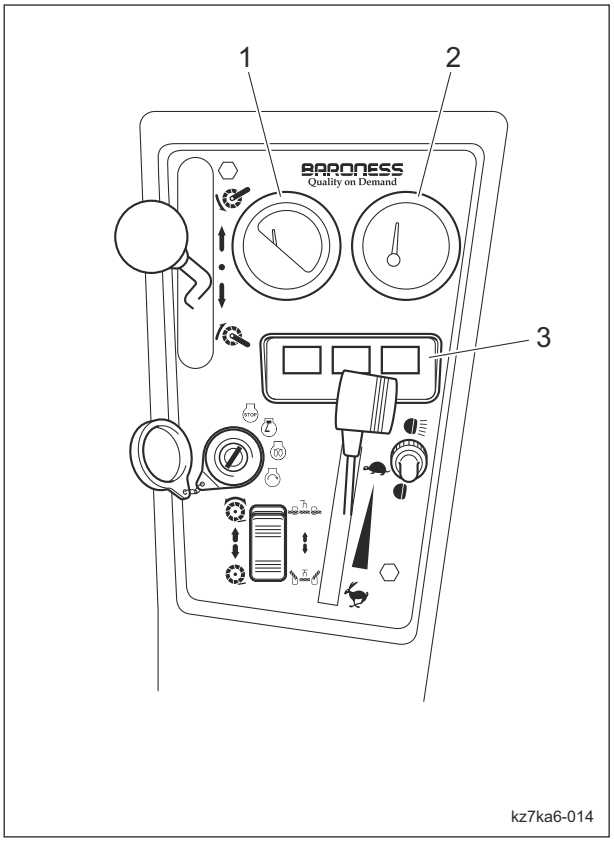

kz7ka6-014

1	Water temperature gauge
2	Fuel gauge
3	Pilot lamps (charge lamp, thermo-start lamp, oil pressure lamp)

Description of Functions

Water Temperature Gauge

The water temperature gauge indicates the water temperature inside the engine.
If the water temperature gauge indicates a level close to "H" during operation, the machine is overheated.
Remove the load from the engine, idle the machine for five minutes, stop the engine, and then inspect the machine and perform any necessary maintenance.

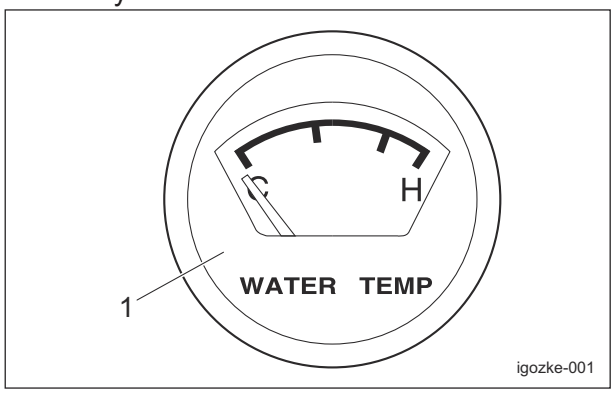

igozke-001

1	Water temperature gauge

Fuel Gauge

The fuel gauge indicates the quantity of fuel inside the fuel tank.
"F" stands for Full, and "E" stands for Empty.

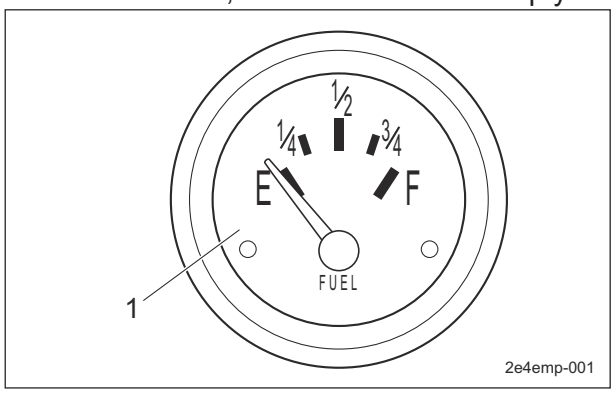

2e4emp-001

1	Fuel gauge

Pilot Lamps

Charge Lamp

The charge lamp is a warning lamp for the battery mark.
It turns on when the ignition key is set to the "ON" position before the engine starts. It turns off when the engine starts and the alternator starts operating properly.
If this lamp illuminates while you are operating the machine, stop the engine immediately, and then inspect the machine and perform any necessary maintenance.

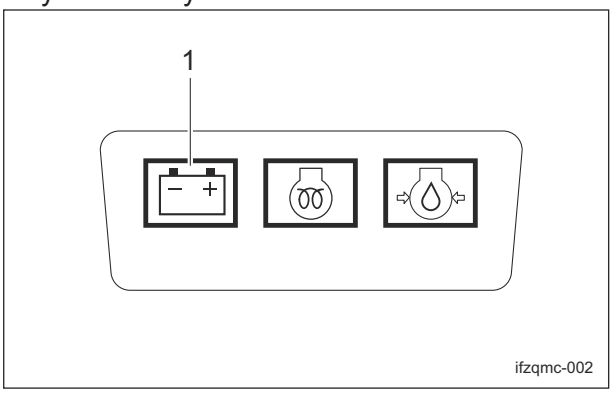

ifzqmc-002

1	Charge lamp

Thermo-Start Lamp

The thermo-start lamp is a warning lamp for indicating the warm-up (glow) status when starting the engine.
When the ignition key is set to the "GLOW" position, it illuminates as the glow plug generates heat.
Illumination of the thermo-start lamp is controlled by the glow lamp timer, and the lamp is turned off after a specified amount of time passes.
The duration of illumination indicates an approximate period of time required for warm-up, and has been fixed at five seconds.

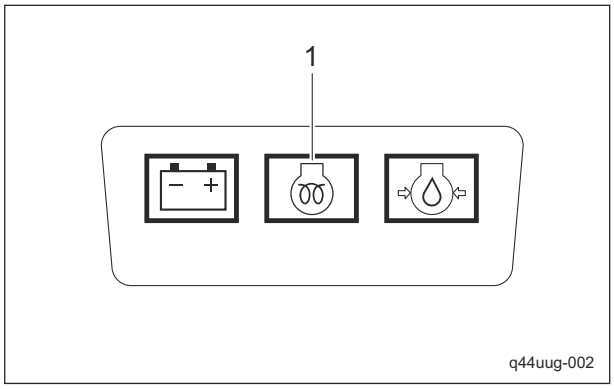

q44uug-002

1	Thermo-start lamp

Oil Pressure Lamp

The oil pressure lamp is a warning lamp that turns on when the oil level inside the engine is low or the oil pressure circulating the oil becomes low.
It turns on when the ignition key is set to the "ON" position before the engine starts. It turns off when the engine starts and engine oil pressure is generated properly.
If this lamp illuminates while you are operating the machine, stop the engine immediately, and then inspect the machine and perform any necessary maintenance.

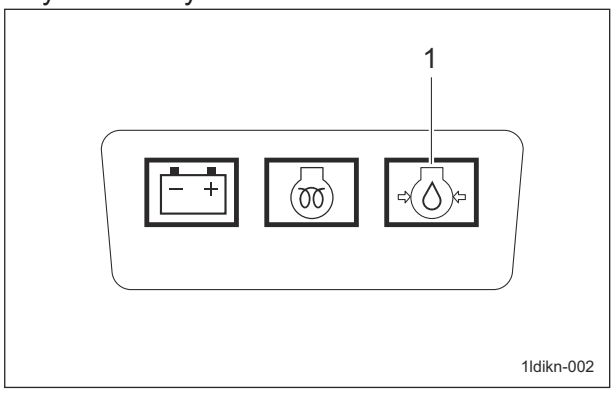

1ldikn-002

1	Oil pressure lamp

Hour Meter

The hour meter indicates the accumulated operation time of the engine.
The number in red figures on a white background is incremented every thirty-six seconds.
The number in white figures on a black background is incremented every hour.
1/100 wheel … red figures on a white background
Hour wheel … white figures on a black background

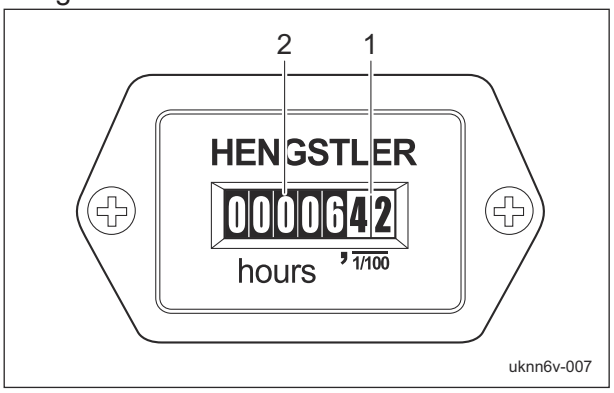

uknn6v-007

1	1/100 wheel
2	Hour wheel

Description of Functions

Safety Device

Interlock System

This machine features an interlock system for starting and stopping the engine.

1. As for starting the engine, the safety device prevents the engine from starting unless it meets each of the following four conditions.
   - An operator is sitting on the seat.
   - The parking brake is applied.
   - The reel rotation switch is set to the "OFF" position.
   - The traveling pedal is set to the neutral position.
2. In the event the operator leaves the seat with the parking brake not applied and the engine running, the safety device will be activated and will stop the engine.
3. In the event the operator leaves the seat with the parking brake applied and the engine running, the safety device will be activated and will stop the engine under any of the following conditions:
   - The traveling pedal is not set to the neutral position. (The operator has depressed the traveling pedal.)
   - The reel rotation switch is set to the "Rotate" position.
     However, when the reel forward/reverse switch is set to the "ON" position (reverse rotation), the engine does not stop.

Warning Mechanisms

Warning Buzzer

⚠ Caution

When the buzzer (intermittent tone) sounds, be sure to stop operation since the engine is overheated.
Do not stop the engine without idling. Allow the engine to cool down, first. Keep the engine idling for about 5 minutes before stopping.
Remove dust that is jamming in the radiator, air cleaner, and etc.

1. Overheat Warning Buzzer
   If water temperature inside the engine exceeds 105 °C (221 °F), a buzzer will sound. (intermittent tone)
   Remove the load from the engine, idle the machine for five minutes, stop the engine, and then inspect the machine and perform any necessary maintenance.
2. Hydraulic Oil Level Warning Buzzer
   If the oil level in the hydraulic tank declines from the specified level by approximately 4.2 dm^3 (4.2 L), a buzzer will sound. (intermittent tone)
   When the buzzer sounds, stop the engine immediately, and then inspect the machine and perform any necessary maintenance.

Operations before Service ..... Page 5-2

Procedure to Open/Close Hood ..... Page 5-2
Procedure to Open/Close Radiator Cover ..... Page 5-2
Procedure to Open/Close Underseat Cover ..... Page 5-3
Procedure to Open/Close Center Cover ..... Page 5-3

Inspection before Use ..... Page 5-3

Engine .....Page 5-3
Main Vehicle ..... Page 5-7

Adjustment before Work ..... Page 5-10

Main Vehicle ..... Page 5-10

Mounting and Dismounting ..... Page 5-12

Procedure to Mount/Dismount .....Page 5-12

Start/Stop of Engine ..... Page 5-12

Procedure to Start Engine ..... Page 5-12
Procedure to Stop Engine ..... Page 5-14

Parking and Stopping .....Page 5-14

Procedure to Leave The Machine ..... Page 5-14

Move .....Page 5-14

Traveling Procedure ..... Page 5-14

Cutting Work ..... Page 5-15

Cutting Prodedure ..... Page 5-15
Procedure to Remove/Install Grass Catcher ..... Page 5-15

Transporting .....Page 5-16

Transporting Procedure .....Page 5-16

Cleaning after Use ..... Page 5-17

Engine .....Page 5-17
Main Vehicle ..... Page 5-18

Storage ..... Page 5-19

Short-Term Storage ..... Page 5-19

Operations before Service

The following sections describe the preparatory works required before performing the services including inspection, adjustment, cleaning, maintenance and repair.

Procedure to Open/Close Hood

Caution

Do not open the hood in strong winds.

Caution

Be careful not to pinch your fingers when you open or close the hood.

1. Remove the pin, then the washer.

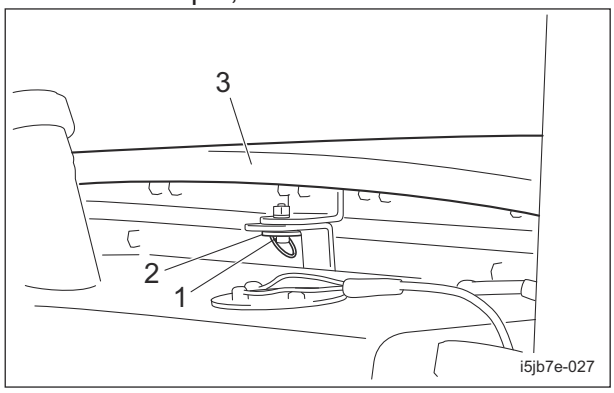

i5jb7e-027

1	Pin
2	Washer
3	Hood

2. Lift up the hood.

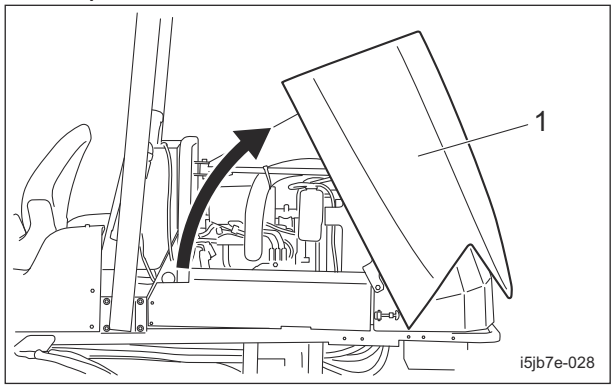

i5jb7e-028

1	Hood

3. When closing the hood, do the operation slowly.
4. Insert the washer, then the pin.

Procedure to Open/Close Radiator Cover

Caution

Do not open the radiator cover in strong winds.

Caution

Be careful not to pinch your fingers when you open or close the cover.

1. Procedure to open the radiator cover:
   [1] Unlock the rubber hooks on the left and right sides.
   [2] Slide the radiator cover backward.

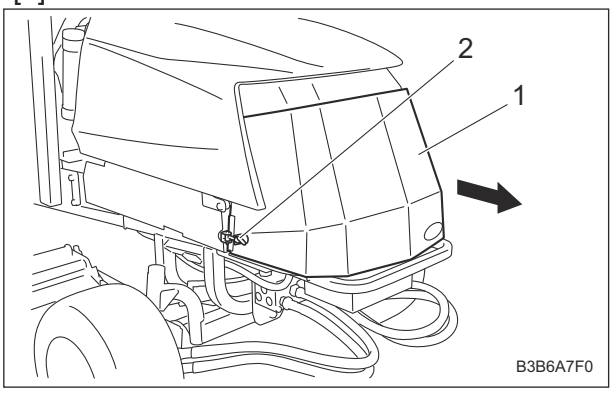

B3B6A7F0

1	Radiator cover
2	Rubber hook

   [3] Pull the radiator cover to the back to open it.

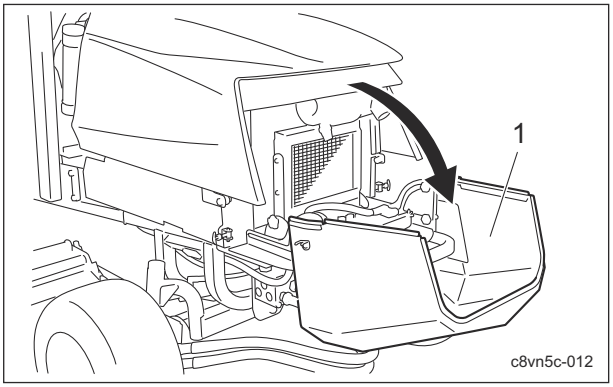

c8vn5c-012

1	Radiator cover

2. Procedure to close the radiator cover:
   [1] Close the radiator cover slowly.
   [2] Lock the rubber hooks on the left and right sides securely.

Procedure to Open/Close Underseat Cover

> **Caution**
>
> Be careful not to pinch your fingers when you open or close the underseat cover.

1. Opening procedure
   [1] Bring the seat to the most front position.
   [2] Remove two bolts located on the rear of the seat.

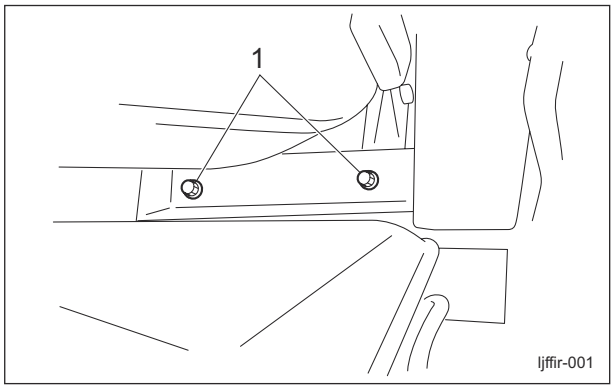

ljffir-001

1	Bolt

   [3] Bring the seat to the backmost position.
   [4] Lift the seat.
   [5] Securely support the underseat cover with the seat support rod.

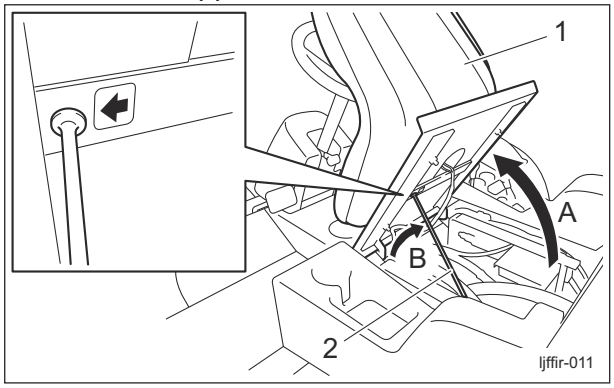

ljffir-011

1	Seat
2	Seat support rod
A	Step 1
B	Step 2

2. Closing procedure
   [1] Remove the seat support rod with the seat held with a hand.
   [2] Lower the seat slowly to close the underseat cover.
   [3] Bring the seat to the frontmost position.
   [4] Install two bolts on the rear of the seat.

Procedure to Open/Close Center Cover

1. Procedure to open the center cover:
   [1] Release the catch clip.
   [2] Open the center cover.

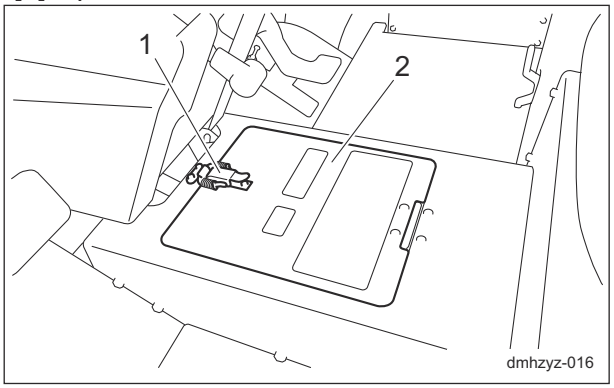

dmhzyz-016

1	Center cover
2	Catch clip

2. Procedure to close the center cover:
   [1] Close the center cover.
   [2] Fasten the catch clip securely.

Inspection before Use

The purpose of the machine inspection is to:
- Prevent accidents
- Prevent damage to the machine
- Maintain machine performance

Detecting machine malfunctions early helps prevent unexpected problems from occurring. If you detect any abnormalities with the machine, immediately perform maintenance or repairs.

Engine

Inspection of Engine Oil

> **Important**
>
> Securely insert the oil level gauge.

Check the contamination of oil and engine oil level to inspect the engine oil.
Inspect the engine oil level 10 to 20 minutes after stopping the engine.

1. Place the machine so that the engine is level.
2. Stop the engine.
3. Open the hood.

4. Pull out the oil level gauge.

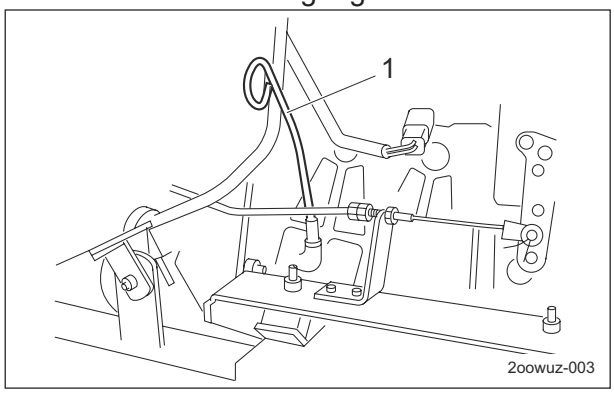

2oowuz-003

1	Oil level gauge

5. Wipe the oil off the oil level gauge cleanly with papers or cloths.
6. After wiping the oil off the oil level gauge, check the contamination.
7. Return the oil level gauge to its original position, insert tightly, and pull out again.
8. Check the engine oil level.
   The appropriate oil level should be between the upper and lower limit lines on the gauge.

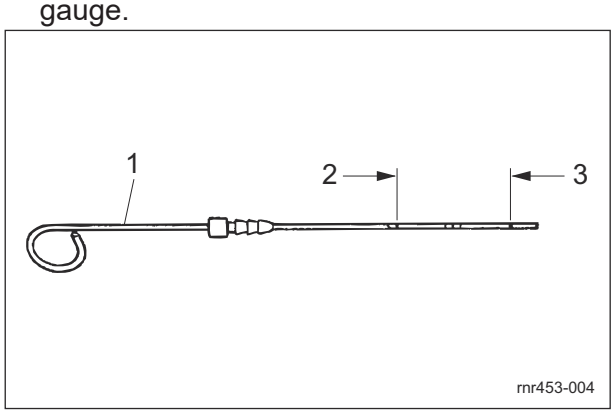

rnr453-004

1	Oil level gauge
2	Upper limit
3	Lower limit

9. Return the oil level gauge to its original position, and insert it tightly.
10. Close the hood.

Inspection of Fuel Quantity

With the machine on a level surface, observe the fuel gauge in the operation panel to check the fuel level.

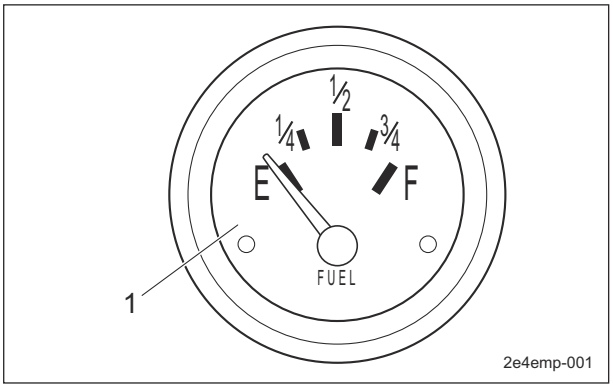

2e4emp-001

1	Fuel gauge

Supply of Fuel

Warning

Do not supply fuel above the middle (marked in red) of the fuel gauge.
If you supply too much fuel, it might overflow from the fuel cap when you travel or work on a slope.

Warning

Keep fire away while refueling.
Do not smoke while refueling.

If the fuel gauge located in the operation panel indicates the level close to E (EMPTY), supply fuel (diesel) as soon as possible.
Refuel up to the middle (marked in red) of the fuel gauge.
The fuel tank capacity is approximately 38.0 dm^3 (38.0 L).

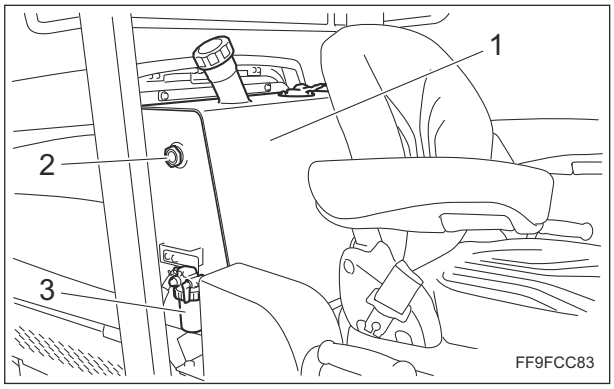

FF9FCC83

1	Fuel tank
2	Fuel gauge
3	Fuel strainer

Air Bleeding of Fuel System

> **Important**
>
> Be sure to tighten the air-bleeding plug except when air bleeding.
> Otherwise, it may cause the engine stop.

This machine has a function of automatic air bleeding.
However, depending on the mechanical structure, it may not bleed air completely.
If the automatic air bleeding does not work well, follow the steps below to perform manual air bleeding.

1. Fill up the fuel tank with fuel and open the fuel cock.
2. Loosen the air-bleeding plug of the fuel filter 2 to 3 turns.
3. If air bubble of the fuel from the plug has gone, tighten the plug.

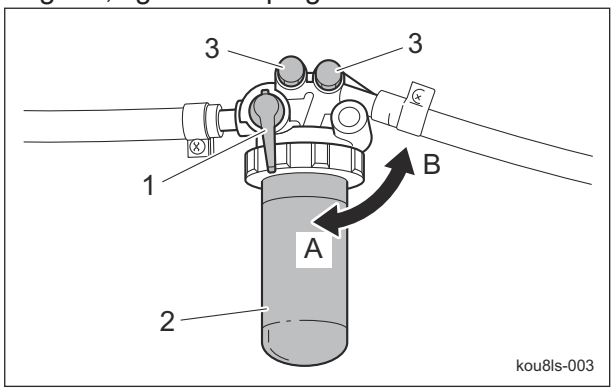

kou8ls-003

1	Fuel cock
2	Fuel filter
3	Air-bleeding plug
A	ON (Open)
B	OFF (Close)

4. Loosen the air-bleeding plug of the injection pump.

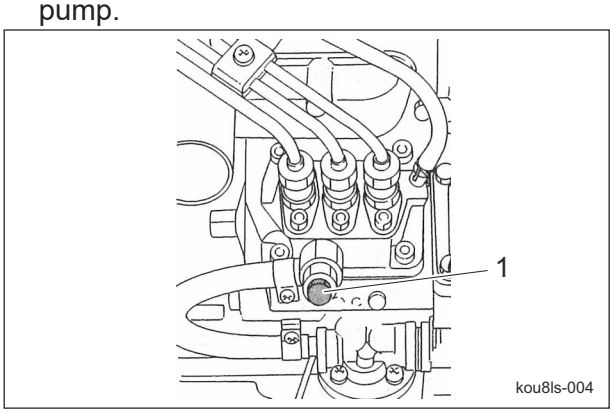

kou8ls-004

1	Air-bleeding plug

5. Sit on the operator's seat.
6. Make sure that the parking brake is applied.
7. Set the reel rotation switch to the "STOP" position.
8. Make sure that the traveling pedal is in the neutral position.
9. Set the ignition key to the "START" position.

> **Important**
>
> In the case that there are still air bubbles in the fuel from air-bleeding plug even after 15 seconds or more passed after setting the ignition key to "START", pause for 30 seconds or more and then repeat the same procedure.

10. If the starter rotates and air bubble of the fuel from the air-bleeding plug has gone, return the ignition key slowly to "OFF" position and tighten the plug.

Inspection of Fuel Filter

1. Make sure that there is no fuel leakage.
2. Make sure that the filter is not damaged.
3. Make sure that the filter is not contaminated.

Inspection of Coolant

> **Caution**
>
> Do not touch the radiator or coolant during engine operation or immediately after the engine has been turned off.
> Otherwise, you may get burned.

> **Caution**
>
> Inspection should take place after the engine has well cooled down.

Make sure that the coolant level in the reserve tank is between "FULL" and "LOW".
If the coolant level is lower than the "LOW" mark, supply clean water and antifreeze.

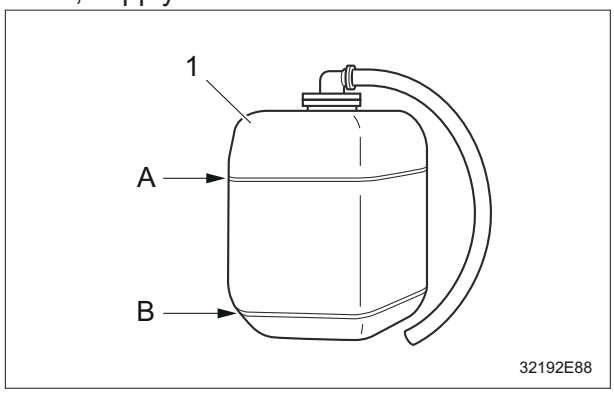

32192E88

1	Reserve tank
A	Full
B	Low

Inspection of Air Cleaner

For details on handling the engine, please refer to the separate Engine Handling Manual.
The air cleaner is a component that removes dirt from the intake air to prevent wear of the cylinder liners and piston rings so that the engine will always operate smoothly.
A contaminated air cleaner element may cause malfunction of the engine.

1. Make sure that there is no damage to the air cleaner.
2. Make sure that the air cleaner filter is not contaminated.

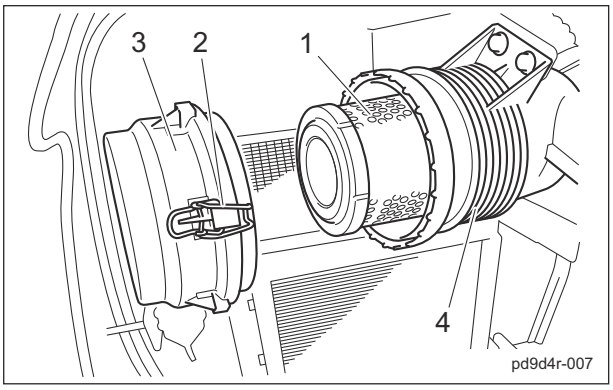

pd9d4r-007

1	Air cleaner filter
2	Clip
3	Air cleaner cap
4	Air cleaner body

Inspection of Radiator Cover

1. Make sure that there is no damage to the radiator cover.
2. Make sure that the radiator cover is not contaminated.

Inspection of Radiator

1. Make sure that there is no damage to the radiator.
2. Make sure that the radiator is not contaminated.

Inspection of Engine-Associated Parts

> **Caution**
>
> Perform operations after the muffler, engine and other parts have sufficiently cooled.
> Otherwise, you may get burned.

1. Check for damages and dirt.
2. Check the mount for looseness and cracks.
3. Check for liquid leakage.
4. Check on and around the muffler for grass clippings and flammable materials.

Main Vehicle

Inspection of Oil Cooler

1. Make sure that there is no damage to the oil cooler.
2. Make sure that the oil cooler is not contaminated.

Inspection of Battery

Danger

Keep away from fire while inspecting or charging the battery.
The battery may explode.

Caution

Implement after the engine and muffler etc. have well cooled down.
Otherwise, you may get burned.

Important

Be sure to stop the engine before inspecting or charging the battery.

Battery inspection items are described below.

1. Inspecting the exterior
   Visually inspect the exterior of the battery, and check that there are no cracks, splits, missing sections, or abnormal deformation in the battery case, and that there is no electrolyte leaking.
   If abnormalities are found, immediately replace the battery.
2. Cleaning the exterior

Warning

Do not clean the battery with a dry cloth.
Cleaning the battery with a dry cloth may cause it to catch fire or explode due to static electricity.

   Use a wet cloth for cleaning.
   Inspect the vent plugs or vent holes on the side of the battery, and if they are blocked by dirt wash them with water to remove the blockage.
   Continuing to use the battery with the vent holes blocked may cause the battery to rupture from increased internal pressure due to gases generated inside the battery.
3. Inspecting the mounting bracket
   Inspect whether the battery is secured firmly with the mounting bracket.
   If the bracket is loose, tighten the mounting bracket nuts until the battery is secured firmly.
   An improperly mounted battery may cause damage to the battery case or electrolyte leaks due to the battery moving with vibrations while traveling.
4. Inspecting the cable terminals
   If the connection between the battery terminals and vehicle's cable terminals are loose, tighten the nuts until the cable terminals are secured firmly.
   Insufficiently tightened terminals may result in poor battery charging, damage to the terminals due to poor contacts, or an explosion.
   If the terminals are corroded, rub them clean with a wire brush or fine grit sandpaper, and lightly apply anti-rust grease.
5. Inspecting the electrolyte level and refilling

Warning

Do not allow the battery fluid level to become lower than the LOWER LEVEL (minimum fluid level line).
The battery may explode if it is used or charged while the battery fluid level is at the LOWER LEVEL (minimum fluid level line).

Warning

When refilling, do not fill purified water above the UPPER LEVEL line.
Doing so may result in electrolyte leaks.

   Clean the areas around the battery fluid level lines using a cloth damped with water to check the electrolyte level from the side of the battery.
   Make sure that the battery fluid level is between the UPPER LEVEL (maximum fluid level line) and the LOWER LEVEL (minimum fluid level line).
   Refill with purified water up to the UPPER LEVEL line if the level is lower than halfway between the UPPER LEVEL and LOWER LEVEL lines.

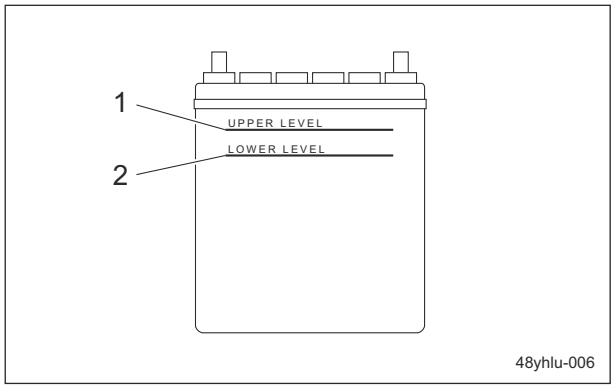

48yhlu-006

1	UPPER LEVEL line
2	LOWER LEVEL line

Inspection of Hydraulic Oil

The oil gauge is on the side of the hydraulic tank.

1. Lower the mower units and maintain that position on a level surface.
2. Make sure that the oil level is at the middle of the oil gauge.

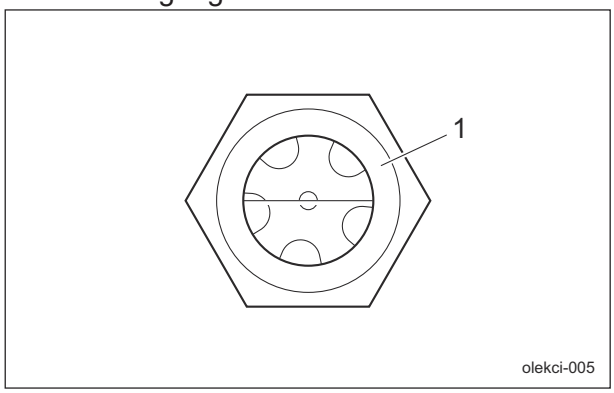

olekci-005

1	Oil gauge

3. Check underneath the machine for oil leakage.

Inspection of Tires

1. Check the pneumatic pressure of the tires.
2. Make sure that there are no cracks, damage or abnormal wear.

	Tire size	Pneumatic pressure	
Front wheel	(26.0 x 10.50 - 12)	140 kPa (1.4 kgf/cm^2)	20 psi
Rear wheel	(20 x 10.00 - 10)	100 kPa(1.0 kgf/cm^2)	15 psi

Inspection of Covers

Warning

If you have removed the cover during inspection, make sure that you replace it in the original position securely.
If the cover remains removed, the operator or the mechanic may come in contact with the rotating objects or belt, or foreign objects may fly off, possibly resulting in injuries.

1. Make sure that there is no wear or deterioration of covers.
2. Make sure that there is no damage to covers.
3. Make sure that there is no interference with moving parts due to deformation of covers.
4. Make sure that covers are installed in their appropriate positions.

Inspection of Wire

Caution

If the brake wire is cut, the machine will be unable to stop.
If the brake wire is cracked or damaged, immediately replace it with a new one.

1. Make sure that the wire is not cracked or damaged.
2. Make sure that the wire is not worn.
3. Make sure that the wire is not crushed.
4. Make sure that the wire is not bent.
5. Make sure that the wire is not corroded or rusted.

Inspection of Brake Pedal

1. Make sure that there is no play in the pedal.
2. Make sure that the pedal moves smoothly.
3. Make sure that there is no abnormal sound when the pedal is depressed.
4. Make sure that the pedal does not touch the floorboard when the pedal is depressed.

Inspection of Parking Brake Lock Lever

1. Make sure that the brake pedal is locked when depressing the parking brake lock lever forward while depressing the brake pedal.

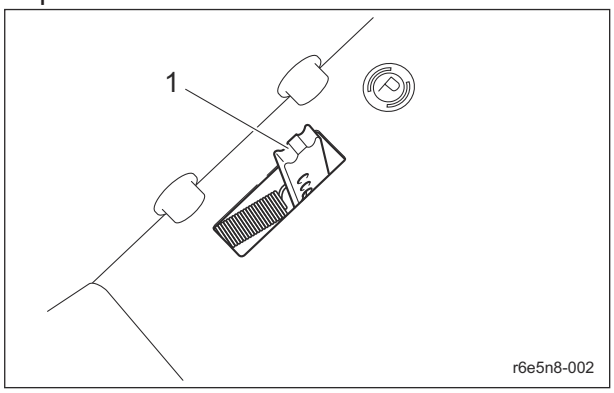

r6e5n8-002

1	Parking brake lock lever

2. Make sure that the brake pedal is unlocked after you depress the brake pedal again.

Inspection of Traveling Pedal

1. Make sure that there is no play in the pedal.
2. Make sure that the pedal moves smoothly.
3. Make sure that there is no abnormal sound when the pedal is depressed.

Inspection of Pedal Stopper

1. Make sure that the pedal stopper fulcrum does not rattle.
2. Make sure that the stopper bolt is tightened with fixing nut.
3. When the pedal stopper is used, make sure that the traveling pedal touches the pedal stopper when the traveling pedal is depressed to the forward side.

Inspection of Liquid Leakage

> **Important**
>
> After approximately 50 hours of operation, some tightened portions may be loosened and liquid such as oil may leak.
> Be sure to retighten the parts.

> **Important**
>
> Repair the machine before operation if liquid leakage found.
> Ignoring leakage will cause further trouble.

1. Check the bottom of the machine for leakage of liquid such as oil, water, fuel, etc.
2. Locate the leakage and identify the type of liquid.

Inspection of Bolts and Nuts

> **Important**
>
> The bolts and nuts may be loosened at the earlier stage of the use.
> Be sure to retighten or replace before operating the machine whenever there is any abnormality.

1. Check the bolts and nuts for looseness and coming off.
2. Check the bolts and nuts for cracks and damages.
3. Check the bolts and nuts for rust.
4. Check around the bolts and nuts for traces of rust fluid.
5. Check for unequal bolt length.
6. Check the bolts and nuts for stripped threads and abrasion.

Inspection of Hour Meter

1. Check the hour meter is not damaged.
2. Check the hour meter operates correctly.
   [1] Switch the ignition key to the "ON" position.
   [2] Check the displayed number increases correctly.
   [3] Switch the ignition key to the "OFF" position.

Inspection of Water Temperature Gauge

1. Check the water temperature is not damaged.
2. Check the water temperature operates correctly.
   [1] Switch the ignition key to the "ON" position.
   [2] Check the water temperature needle swings.
   [3] Switch the ignition key to the "OFF" position.

Inspection of Fuel Gauge

1. Check the fuel gauge is not damaged.
2. Check the fuel gauge operates correctly.
   [1] Switch the ignition key to the "ON" position.
   [2] Check the fuel gauge needle swings.
   [3] Switch the ignition key to the "OFF" position.

Inspection of Pilot Lamps

1. Check the pilot lamps are clean.
2. Check the pilot lamps are not damaged.

Inspection of Safety Device

Repair the machine before operation whenever there is any abnormality.

1. Interlock system
   Make sure that the interlock system operates correctly.
   "Interlock System" (Page 4-10)
2. ROPS
   (If the machine is equipped with ROPS and a seat belt)
   Make sure that the ROPS is not damaged or broken.
3. Seat belt
   (If the machine is equipped with ROPS and a seat belt)
   Make sure that the seat belt is not damaged or broken.

Inspection of Steering Wheel

1. Make sure that there is no play in the steering wheel.
2. Make sure that the steering wheel turns smoothly when it is turned.
3. Make sure that there is no abnormal sound when the steering wheel is turned.
4. Check the direction of tires when the steering wheel is turned.
   [1] Start the engine.
   [2] Make sure that the rear tire turns left when the steering wheel is turned right.
   [3] Make sure that the rear tire turns right when the steering wheel is turned left.
   [4] Stop the engine.

Inspection of Light

Note:
Depending on the specifications, this function may not be available.

1. Check the lights are not damaged.
2. Check the lights turn on/off.
   [1] Switch the ignition key to the "ON" position.
   [2] Set the light switch to the "ON" position.
   [3] Check the lights have turned on.
   [4] Set the light switch to the "OFF" position.
   [5] Check the lights have turned off.
   [6] Switch the ignition key to the "OFF" position.

Inspection of Grass Catcher

1. Make sure that there is no wear or deterioration of the grass catcher.
2. Make sure that there is no damage to the grass catcher.
3. Make sure that there is no interference to moving parts due to deformation of the grass catcher.

Adjustment before Work

Main Vehicle

Adjustment of Seat Position

[JP]

> **Warning**
> Since it is dangerous, do not adjust while traveling.

Use the seat adjustment lever to adjust the seat position back and forth.
Adjust the position according to the operator's body size.
The adjustment lever is located beneath the front part of the seat.

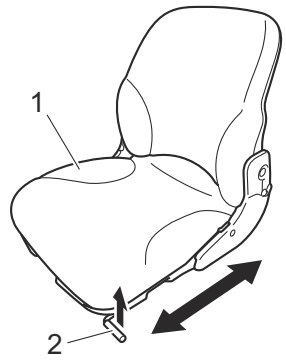

s1gskp-021

1	Seat
2	Adjuster lever

[GB]
[US]

Warning

Do not adjust while traveling since it is dangerous.

Adjust the position to fit the operator.

1. Use the forward/backward adjustment lever to adjust the seat back and forth.
2. Use the backrest tilt adjustment lever to adjust the angle of the backrest.
3. Pull out the suspension adjustment handle and move it up or down to adjust the firmness of the seat suspension.
   Observe the suspension adjustment scale while making adjustments. [50 - 160 kg (110.2 - 352.7 lb)]

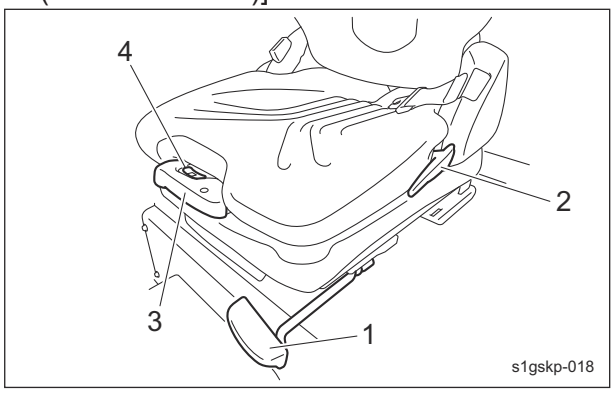

s1gskp-018

1	Forward/backward adjustment lever
2	Angle adjustment lever
3	Suspension adjustment handle
4	Suspension adjustment scale

Adjustment of Steering Wheel Position

Warning

Since it is dangerous, do not adjust the steering wheel while traveling.

Caution

Make sure the steering wheel position is securely locked.
It may result in an unexpected accident if it becomes loose while traveling.

The steering wheel position can be adjusted up or down.
Adjust the position according to the operator's body size.

1. Shift the tilt lever to the "FREE" position.
2. Adjust the steering wheel position.
3. Shift the tilt lever to the "LOCK" position and secure the steering wheel position.

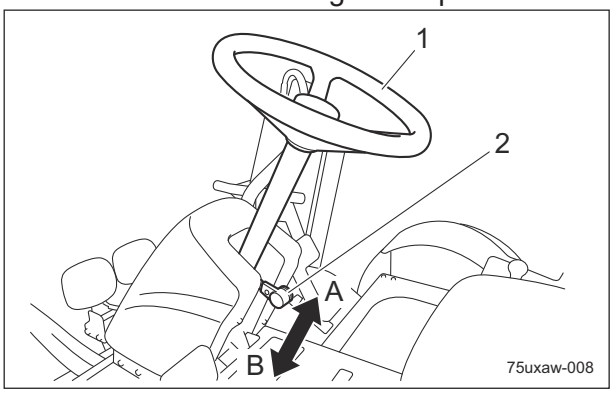

75uxaw-008

1	Steering wheel
2	Tilt lever
A	FREE (released)
B	LOCK (locked)

Adjustment of Mower Stopper Pin

Note:
Depending on the specifications, this function may not be available.
The mower stopper pin can prevent or allow tilting of the mower units.
Adjust according to the operating conditions.
Fixed:

- The mowing line while traveling straight ahead is a straight line. (The mowing line is easy to see.)

・The mower units do not tilt while operating on slopes, and incomplete mowing can be reduced.

Released:

・It is appropriate when turning while mowing or it is easy to follow undulations.

1. With the machine on a level surface, lower all mower units.
2. Apply the parking brake, and then stop the engine.
3. Adjust the position of the mower stopper pin, and then insert the cotter pin.

To fix:

Insert the cotter pin into the upper hole in the mower stopper pin.

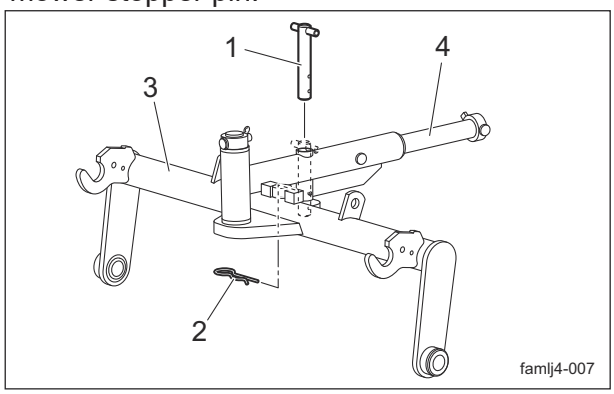

famlj4-007

1	Mower stopper pin
2	Cotter pin
3	Mower arm
4	Mower coupling

To release:

Insert the cotter pin into the lower hole in the mower stopper pin.

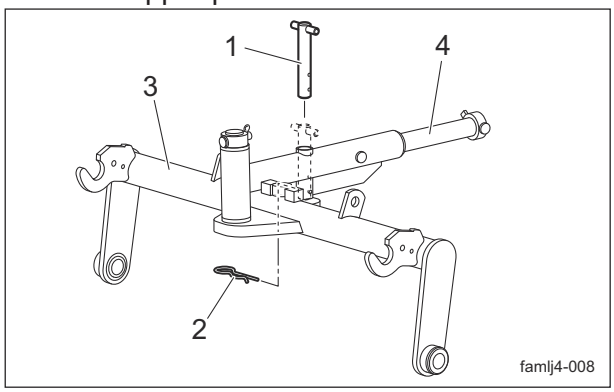

famlj4-008

1	Mower stopper pin
2	Cotter pin
3	Mower arm
4	Mower coupling

Mounting and Dismounting

Procedure to Mount/Dismount

This machine is equipped with a step for mounting/dismounting.
Place your foot on the step when mounting and dismounting the machine.

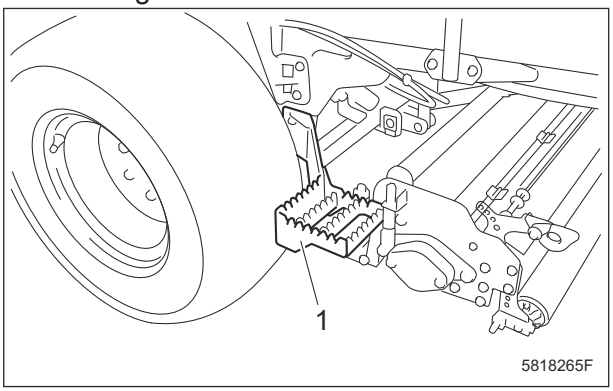

5818265F

1	Step

Start/Stop of Engine

Procedure to Start Engine

Caution

Before starting the engine, make sure that there are no other people or obstacles around the machine.

Important

Starter operation must take 15 seconds or less.
If the engine still does not start, stop using the battery for 30 to 60 seconds to avoid exhausting the battery.

1. Make sure that the fuel cock of the water separator is open.

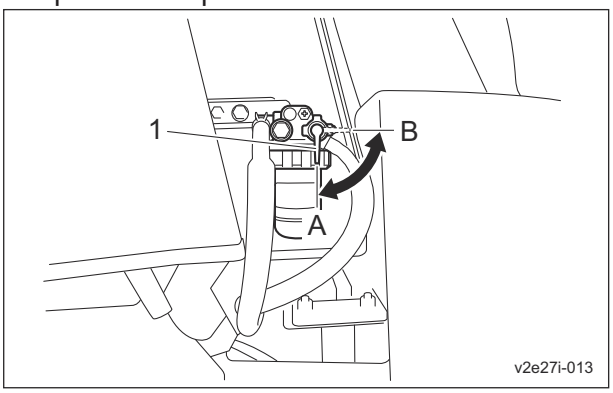

v2e27i-013

1	Fuel cock
A	ON (Open)
B	OFF (Close)

2. Make sure that the fuel cock of the fuel filter is open.

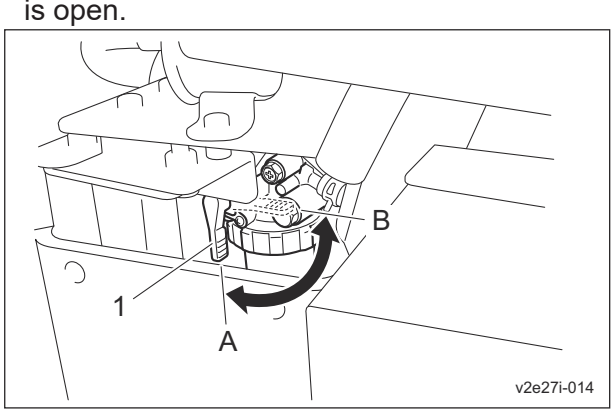

v2e27i-014

1	Fuel cock
A	ON (Open)
B	OFF (Close)

3. Sit on the seat.
4. Depress the brake pedal and make sure that the parking brake is applied.
5. Make sure that the reel rotation switch is set to the "Stop" position.
6. Make sure that the mower unit up/down lever is set to the "Neutral" position.
7. Make sure that the traveling pedal is in the neutral position.
8. Move the throttle lever halfway from the "Low speed" position toward the "High speed" position.

Important

The thermo-start lamp turns off at the specified time. However, the lamp turning off is not related to the glow plug generating heat. If the ignition key is left in the "GLOW" position after the lamp is turned off, the plug will still generate heat.
The thermo-start lamp will stay illuminated for 5 seconds.

9. Switch the ignition key to the "GLOW" position.

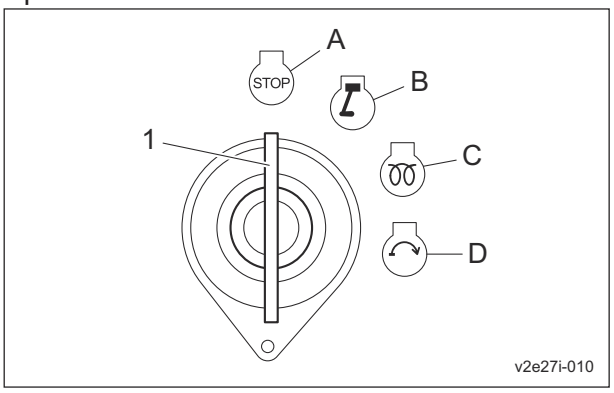

v2e27i-010

1	Ignition key
A	OFF
B	ON
C	GLOW
D	START

10. Make sure that the thermo-start lamp is turned on.

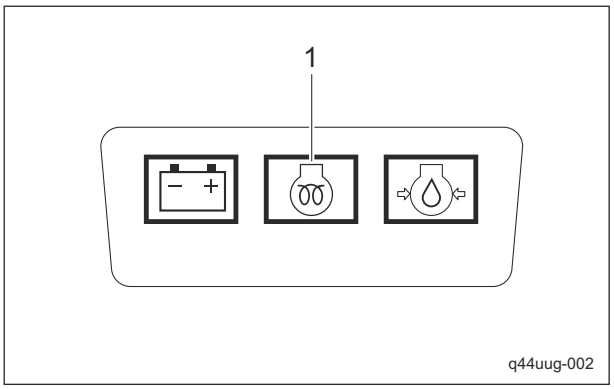

q44uug-002

1	Thermo-start lamp

11. After the thermo-start lamp turns off, immediately set the ignition key to the "START" position.

> **Important**
>
> Quickly returning the ignition key from the "START" position to the "ON" position may result in damage to the machine.

12. When the starter starts rotating and the engine starts, return the ignition key to the "ON" position slowly.
13. Make sure that the charge lamp and oil pressure lamp turn off.
    If they do not turn off, stop the engine and inspect the machine.

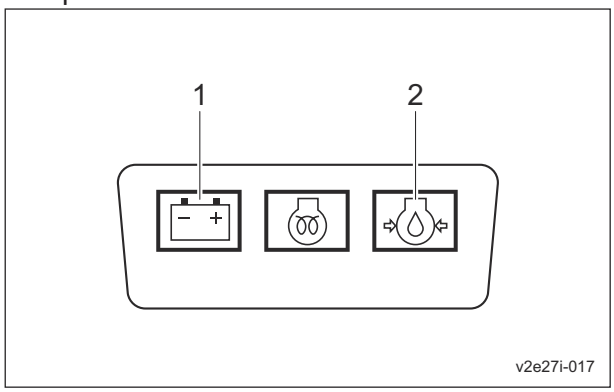

v2e27i-017

1	Charge lamp
2	Oil pressure lamp

14. Move the throttle lever to the "Low speed" position, and then warm up the engine so that the needle points above "C" on the water temperature gauge.

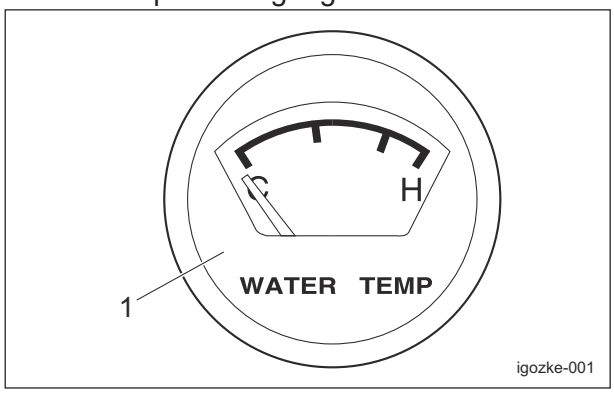

igozke-001

1	Water temperature gauge

Procedure to Stop Engine

1. Set the traveling pedal to the neutral position.
2. Apply the parking brake.
3. Set the reel rotation switch to the "Stop" position.
4. Raise all the mower units.
5. Set the anti-falling stop valve to the "STOP" position.
6. Shift the throttle lever to the "Low speed" position, and then idle the machine for 1 - 2 minutes.
7. Switch the ignition key to the "OFF" position.
8. Make sure that the engine has stopped.

Parking and Stopping

Procedure to Leave The Machine

> **⚠ Caution**
>
> If the brakes are not sufficiently effective, use the wheel stoppers to secure the machine.

> **⚠ Caution**
>
> Never park the machine on a slope.

1. Park the machine on level ground.
2. Apply the parking brake.
3. Stop the engine.
4. Remove the ignition key.
5. Install the cap to the key switch.
6. Leave the driver's seat.

Move

Traveling Procedure

> **⚠ Caution**
>
> Under any circumstances drive the machine at such a speed that you can stop it immediately for emergencies.

> **Important**
>
> Do NOT start to move or stop the machine abruptly.
> It will damage the hydraulic system or result in oil leakage.

1. Start the engine.

2. Make sure that all the mower units are raised.
3. Make sure that the anti-falling stop valve is set to the "Stop" position.
4. Make sure that the mower lock levers (latches) for mower units #4 and #5 are engaged.
5. Gradually shift the throttle lever to the "High speed" position.
6. Release the parking brake.
7. Slowly depress the traveling pedal.
8. The machine starts traveling.
9. Release the traveling pedal and depress the brake pedal to stop the machine.

Cutting Work

Cutting Prodedure

Caution

Cutting work must be performed at an appropriate speed for the site and location. When cutting bumpy surfaces, keep the engine rpm steady, and slow down the cutting speed.

Caution

Please note that if you stop operating the mower unit up/down lever before the mower units are raised completely, reel rotation may not stop.
Reel rotation will be turned on or off based on the sensor-detected position of the mower units.

Important

Perform cutting work with the mower unit up/down lever shifted to the "DOWN" position.
Reel rotation will be turned off if the mower unit up/down lever shifted to the "NEUTRAL" or "UP" position.

Important

Do NOT start to move or stop the machine abruptly.
It will damage the hydraulic system or result in oil leakage.

1. Shift the reel rotation/stop switching levers of all mower units to the "Rotate" position.
2. Start the engine.
   "Procedure to Start Engine" (Page 5-12)
3. Rev up the engine to the maximum speed.
4. Release the parking brake.
5. Right before starting cutting work, set the anti-falling stop valve to the "Open" position.
6. Release the mower lock levers (latches) for mower units #4 and #5.
7. Lower the mower units.
8. Rotate the reel cutters (cutting cylinders) of all mower units.
9. Depress the traveling pedal to start cutting work.

Procedure to Remove/Install Grass Catcher

Note:
Depending on the specifications, this function may not be available.

Caution

Stop the engine before removing or installing the grass catcher.

1. Set the reel rotation switch to the "Stop" position.
2. Lower the mower units.
3. Apply the parking brake.
4. Stop the engine.
5. Remove or install the grass catcher.
   [1] Removal of grass catcher:
   Lift up the grass catcher, and remove the mounting pins on the left and right of the grass catcher from the grass catcher mounting brackets.
   [2] Installation of grass catcher:
   Install the mounting pins on the left and right sides of the grass catcher into the grass catcher mounting brackets.

■ Mower units #2 & 3
Note：
The illustration shows the mower unit #3. Right and left positions of the grass catcher mounting brackets differ according to the location of a mower unit.

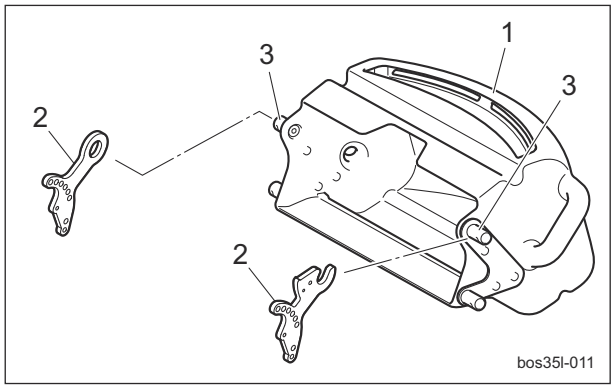

bos35l-011

1	Grass catcher
2	Grass catcher mounting bracket
3	Mounting pin

■ Mower units #1, 4 & 5
Note：
The illustration shows the mower units #1 & 5. Right and left positions of the grass catcher mounting brackets differ according to the location of a mower unit.

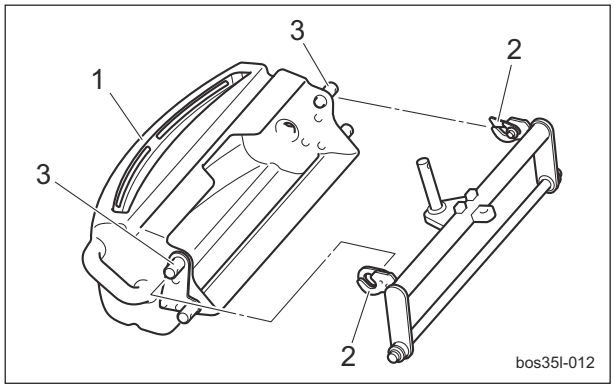

bos35l-012

1	Grass catcher
2	Grass catcher mounting bracket
3	Mounting pin

Transporting

Transporting Procedure

When loading this machine into a trailer or a truck to transport it, drive the machine in reverse. When unloading, drive the machine forward.
If the roof is installed on the machine, remove it.
The roof may be damaged by wind pressure.

Cleaning after Use

The purpose of the machine cleaning is to:

- Prevent accidents
- Prevent damage to the machine
- Maintain machine performance

Properly clean the machine to maintain its functionality and performance.
If you detect any abnormalities with the machine, immediately perform maintenance or repairs.

Engine

Cleaning of Engine-Associated Parts

> **Caution**
>
> Perform operations after the muffler, engine and other parts have sufficiently cooled. Otherwise, you may get burned.

1. Clean clippings and remove dirt.
2. Blow compressed air to clean any grass or flammable materials that may be attached on or around the muffler.

Cleaning of Radiator Cover

> **Important**
>
> An unclean radiator cover may cause overheating or damage to the engine.
> It may also cause malfunction of the hydraulic system.

If the radiator cover has been contaminated with dust, be sure to clean it.
Especially after operating the machine in a dusty environment, it is important to remove dust as soon as possible.

1. Unlock the rubber hooks on the left and right sides.
2. Slide the radiator cover backward.

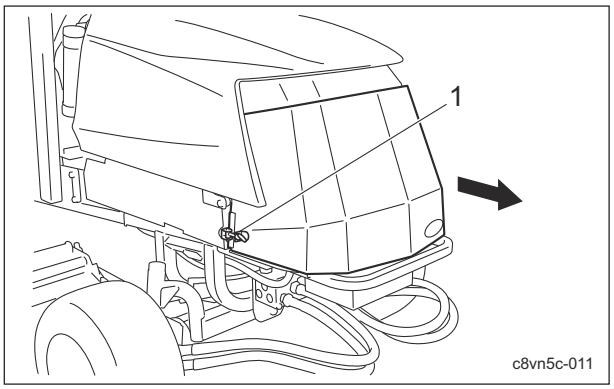

c8vn5c-011

1	Rubber hook

3. Pull the radiator cover to open it.

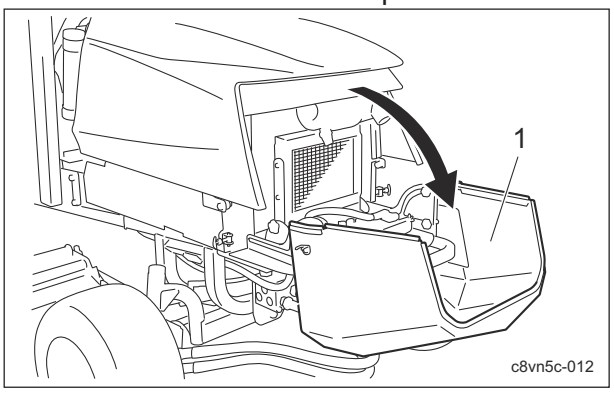

c8vn5c-012

1	Radiator cover

4. Carefully clean the front and back of the radiator cover with water or compressed air.

Cleaning of Radiator

Caution

Do not touch the radiator or coolant during engine operation or immediately after the engine has been turned off.
Otherwise, you may get burned.

Important

An unclean radiator may cause overheating to the engine.
It may also cause malfunction of the hydraulic system.

Important

Do not use solid objects, such as a spatula or screwdriver, or high-pressure water to clean the radiator or oil cooler.
Otherwise, special fins or tubes may be damaged, possibly resulting in reduced cooling performance or coolant/hydraulic oil leakage.

If the radiator has been contaminated with dust, be sure to clean it.
After operating the machine in a dusty environment, it is important to remove dust as soon as possible.

1. Open the radiator cover.
2. Loosen the knobs on the left and right of the oil cooler, and then tilt the oil cooler.

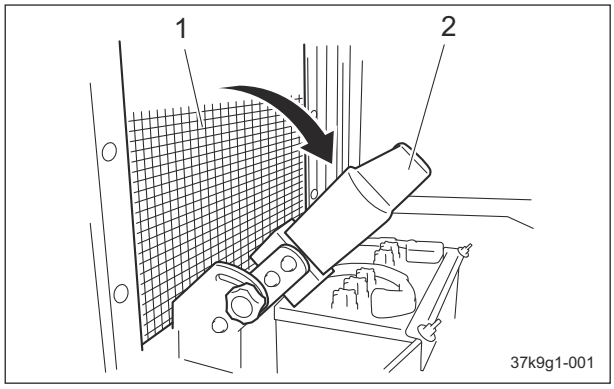

37k9g1-001

1	Radiator
2	Oil cooler

3. Carefully clean the front and back of the radiator with water or compressed air.

Main Vehicle

Cleaning of Oil Cooler

Caution

Clean after the hydraulic system has sufficiently cooled.
Otherwise, you may get burned.

Caution

An unclean oil cooler may cause malfunction of the hydraulic system.

Important

Do not use solid objects, such as a spatula or screwdriver, or high-pressure water to clean the radiator or oil cooler.
Otherwise, special fins or tubes may be damaged, possibly resulting in reduced cooling performance or coolant/hydraulic oil leakage.

If the oil cooler has been contaminated with dust, be sure to clean it.
After operating the machine in a dusty environment, it is important to remove dust as soon as possible.

1. Open the radiator cover.
2. Loosen the knobs on the left and right of the oil cooler, and then tilt the oil cooler.

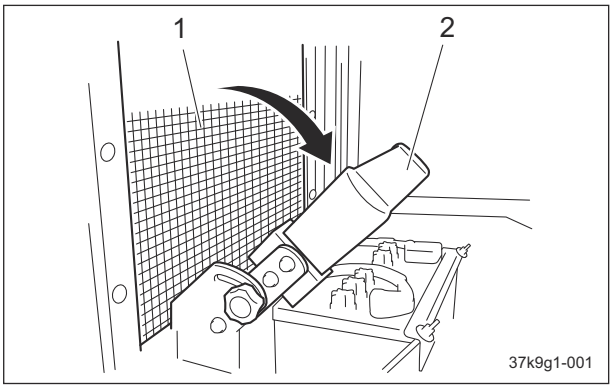

37k9g1-001

1	Radiator
2	Oil cooler

3. Carefully clean the front and back of the oil cooler with water or compressed air.

Storage

Short-Term Storage

Short-term storage means that the machine is temporarily stored (within 1 month) without use.
Follow the instructions below for short-term storage of the machine.

1. Cleaning
   - Remove dirt, grass clippings, oil stains etc. completely from the main vehicle and engine.
2. Mower units
   - When storing this machine, lower all the mower units unless a positive mechanical lock is provided.
3. Storage location
   - Cover the machine and store it in a dry place where it will not be exposed to rain.

Maintenance

Precautions for Maintenance .....Page 6-2

Operations before Maintenance ..... Page 6-2

Jacking Up The Machine .....Page 6-2

About Jacking Up The Machine .....Page 6-2
Jack-Up Points .....Page 6-2

Inspection and Cleaning ..... Page 6-3

Engine .....Page 6-3
Main Vehicle ..... Page 6-8

Supplying Fluids .....Page 6-8

Engine .....Page 6-8
Main Vehicle ..... Page 6-10

Greasing ..... Page 6-12

About Greasing .....Page 6-12
Greasing Points ..... Page 6-13

Lubrication ..... Page 6-15

About Lubrication .....Page 6-15
Lubricating Points ..... Page 6-16

Adjustment .....Page 6-17

Engine .....Page 6-17

Replacement ..... Page 6-18

Engine .....Page 6-18
Main Vehicle ..... Page 6-22

Storage ..... Page 6-27

Long-Term Storage .....Page 6-27

Precautions for Maintenance

Warning

The chapter "Maintenance" in this manual describes practical measures which should be performed by a mechanic with expertise.
The owner should instruct the mechanic with expertise to perform maintenance service for this machine.

Caution

First, learn well the operations you plan to perform.

Important

Use tools appropriate for each operation.

Important

Use Baroness genuine parts for replacement and accessories.
Our product warranty may be void if you use non-genuine parts for replacement or accessories.

Operations before Maintenance

Jacking Up The Machine

About Jacking Up The Machine

Warning

When replacing a tire or beginning any other maintenance or repairs, be sure to chock the wheels to prevent the machine from moving.
Before jacking up the machine, park it on a hard, flat surface such as a concrete floor and remove any obstacles that could prevent you from performing the work safely.
When necessary, use an appropriate chain block, hoist, or jack.
Support the machine securely with jack stands or appropriate blocks.
Failure to do so may cause the machine to move or fall, resulting in injury or death.

Important

Only place a jack under the jack-up points specified.
Placing a jack at any other point will result in damage to the frame or other parts.

Use the jack-up points identified in this manual when jacking up the machine.

Jack-Up Points

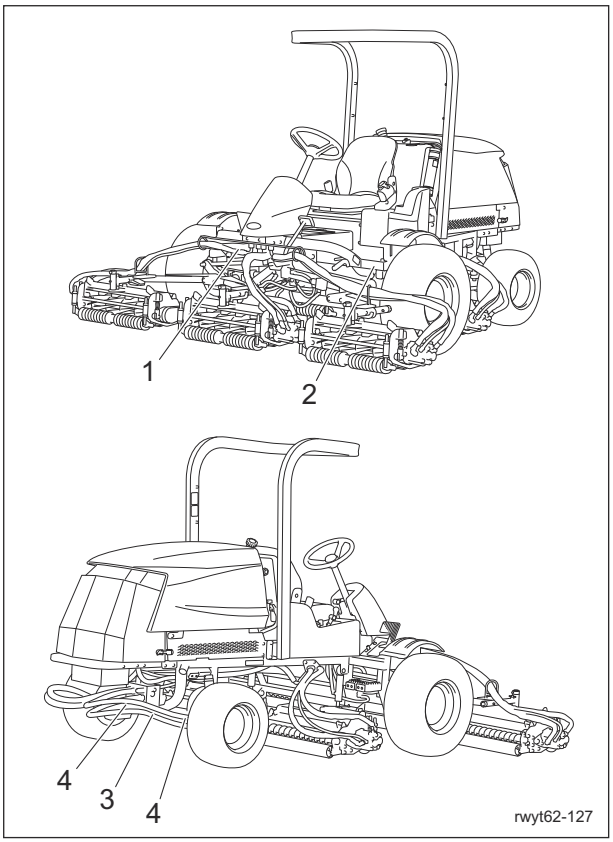

rwyt62-127

	Jack-up Points
1	Front right frame
2	Front left frame
3	Rear frame
4	Pivot

1. Front right frame

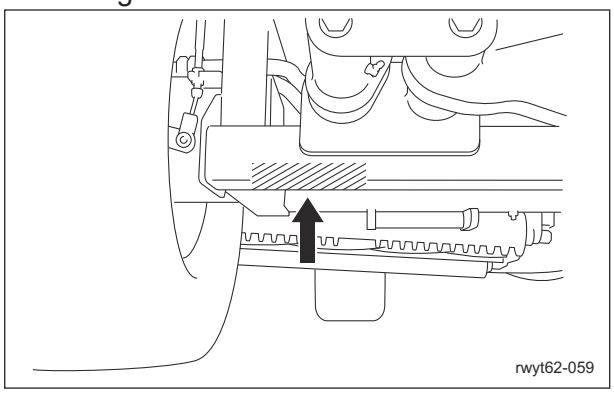

rwyt62-059

2. Front left frame

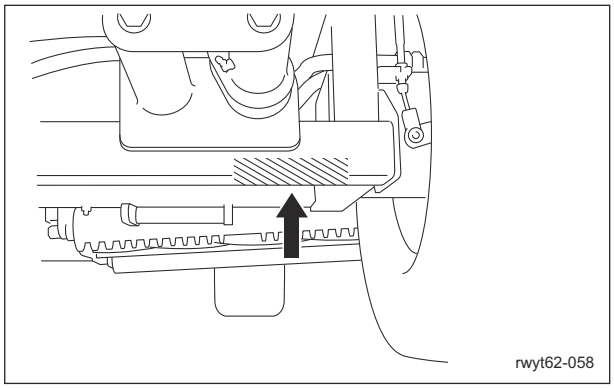

rwyt62-058

3. Rear frame

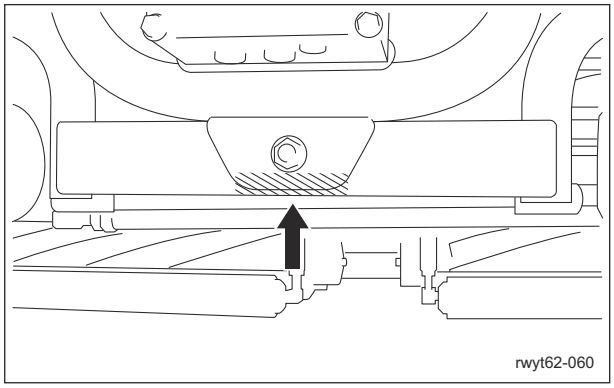

rwyt62-060

4. Pivot
   There are two locations.

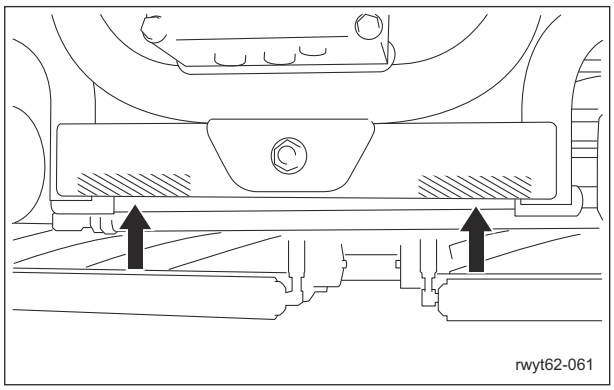

rwyt62-061

Inspection and Cleaning

Inspect and clean the machine with the goals of the followings.

- Accident prevention
- Failure prevention
- Performance retention

Make efforts for early detection of the machine failure and prevention of the sudden occurrence of trouble.
Perform maintenance and repair works immediately if any abnormality is found in the machine.

Engine

Cleaning of Fuel Filter

1. Close the fuel cock on fuel filter.

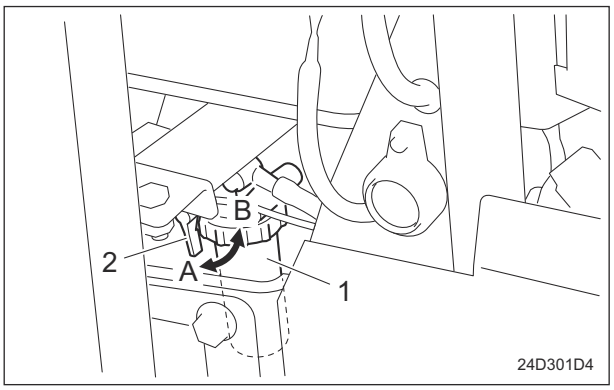

24D301D4

1	Fuel filter
2	Fuel cock
A	ON (Open)
B	OFF (Close)

2. Remove the retaining ring and then remove the cup.

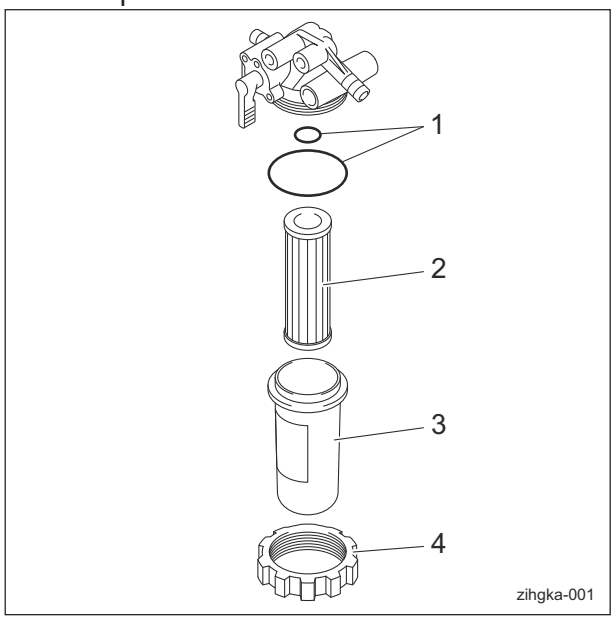

zihgka-001

1	O-ring
2	Element
3	Cup
4	Retaining ring

3. Soak the filter element in diesel fuel and clean it.
4. Clean the inside of the filter cup with diesel fuel.

> **Important**
>
> While installing, be careful that it is not contaminated with dirt or dust.
> If the fuel is contaminated with dirt or dust etc., the fuel injection pump and injection nozzle will become worn.

5. Install the fuel filter and put the parts back together.
6. Fill up the fuel tank with fuel and open the fuel cock.

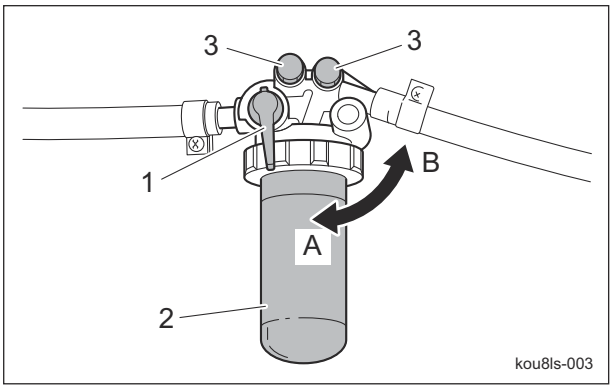

kou8ls-003

1	Fuel cock
2	Fuel filter
3	Air-bleeding plug
A	ON (Open)
B	OFF (Close)

7. Turn the key switch to the "ON" position. When the fuel pump is activated, the cup will be filled with fuel and air bleeding will occur automatically.
8. Switch the ignition key to the "START" position and remove air out of the fuel line.
9. If the engine does not start within 15 seconds after switching the ignition key to the "START" position, wait at least 30 seconds, and then repeat the same operation.

Inspection of Water Separator

> **Important**
>
> Water contamination in the fuel may decrease the engine starting performance and power output and may result in breakage of engine parts.

1. Make sure that the water separator is not damaged or dirty.
2. Make suer that there is no water leakage.
3. Make sure that debris and water have not accumulated in the cup.
   With the float raised, water incorporation is confirmed.
   When the float reaches the discharge level, discharge water.

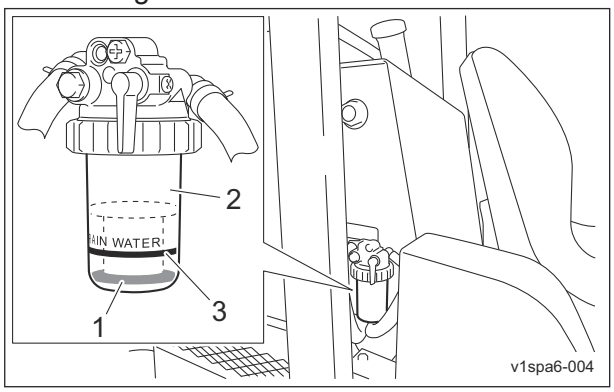

v1spa6-004

1	Float
2	Cup
3	Discharge level

Draining of Water Separator

> **Important**
>
> Water contamination in the fuel may decrease the engine starting performance and power output and may result in breakage of engine parts.

Drain water from the water separator according to the maintenance schedule.
And drain water whenever the float is raised by water.

1. Stop the engine, and then turn the key switch to the "OFF" position.
2. Place a container under the water separator.
3. Close the fuel filter cock.
4. Close the fuel cock of water separator.

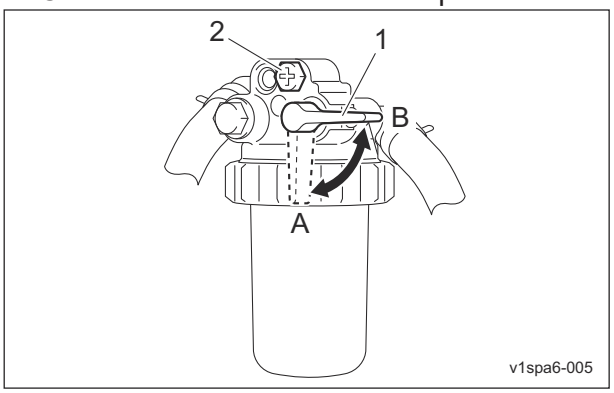

v1spa6-005

1	Fuel cock
2	Air-bleeding plug
A	ON (Open)
B	OFF (Close)

5. Remove the retaining ring and then remove the cup.

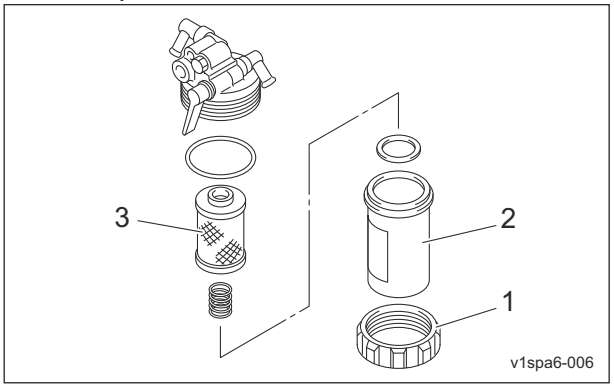

v1spa6-006

1	Retaining ring
2	Cup
3	Element

6. Discharge water from the cup.

> **Important**
>
> When installed, be careful that it is not contaminated with dirt or dust.
> If the fuel is contaminated with dirt or dust etc., the fuel injection pump and injection nozzle will become worn.

7. Put the parts back together.
8. Fill up the fuel tank with fuel and open the fuel cock.

9. Open the fuel cock of water separator.

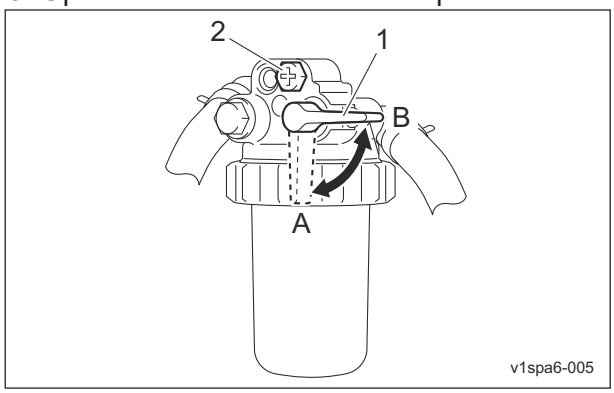

v1spa6-005

1	Fuel cock
2	Air-bleeding plug
A	ON (Open)
B	OFF (Close)

10. Loosen the air-bleeding plug by one turn.
11. Set the ignition key to the "ON" position. After the fuel pump operated, the cup becomes filled with fuel and air bleeding occurs automatically.
12. Turn the key to the "START" position and remove air out of the fuel line.
13. In the case that there are still air bubbles in the fuel from air-bleeding plug even after 15 seconds or more pass after setting the ignition key to "START", pause for 30 seconds or more and then repeat the same steps.
14. Tighten the air-bleeding plug.

Cleaning of Water Separator

> **Important**
>
> Water contamination in the fuel may decrease the engine starting performance and power output and may result in breakage of engine parts.

Clean the water separator according to the maintenance schedule.
And clean it whenever debris has accumulated in the cup.

1. Stop the engine, and then turn the ignition key to the "OFF" position.
2. Place a container under the water separator.
3. Close the fuel filter cock.

4. Close the fuel cock of water separator.

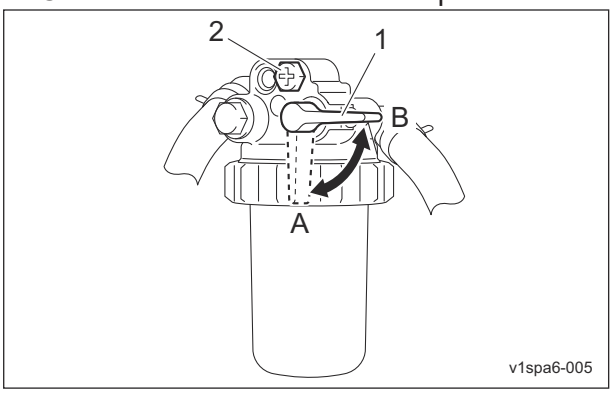

v1spa6-005

1	Fuel cock
2	Air-bleeding plug
A	ON (Open)
B	OFF (Close)

5. Remove the retaining ring and then remove the cup.

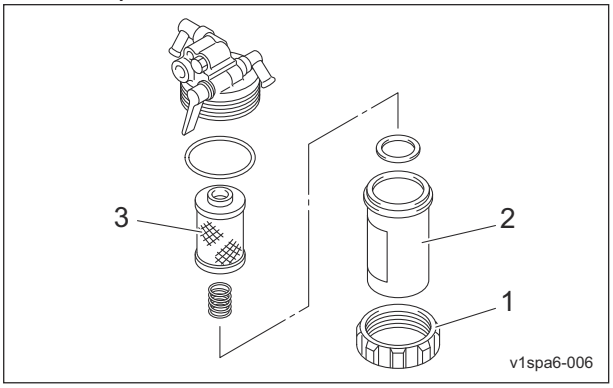

v1spa6-006

1	Retaining ring
2	Cup
3	Element

6. Discharge water from the cup.
7. Clean the cup and element with light oil. Replace the element with new one as necessary.

> **Important**
>
> When installed, be careful that it is not contaminated with dirt or dust.
> If the fuel is contaminated with dirt or dust etc., the fuel injection pump and injection nozzle will become worn.

8. Put the parts back together.
9. Fill up the fuel tank with fuel and open the fuel cock.

10. Open the fuel cock of water separator.

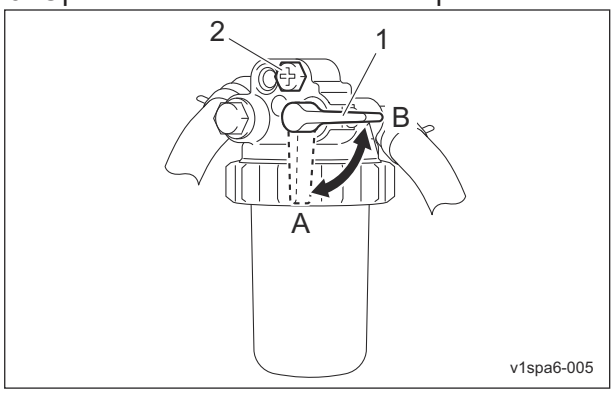

v1spa6-005

1	Fuel cock
2	Air-bleeding plug
A	ON (Open)
B	OFF (Close)

11. Loosen the air-bleeding plug by one turn.
12. Set the ignition key to the "ON" position. After the fuel pump operated, the cup becomes filled with fuel and air bleeding occurs automatically.
13. Turn the key to the "START" position and remove air out of the fuel line.
14. In the case that there are still air bubbles in the fuel from air-bleeding plug even after 15 seconds or more pass after setting the ignition key to "START", pause for 30 seconds or more and then repeat the same steps.
15. Tighten the air-bleeding plug.

Cleaning of Air Cleaner Element

For details on handling the engine, please refer to the separate Engine Handling Manual. A contaminated air cleaner element may cause malfunction of the engine.
To maximize the life of the engine, clean the air cleaner properly.

1. Remove the clips, and then remove the air cleaner cap.
2. Remove the air cleaner filter.
3. While paying close attention not to damage the air cleaner filter, tap a solid portion of the air cleaner filter or blow compressed air from its inside to remove dust and dirt.
   If the air cleaner filter is extremely contaminated, replace it with a new one.
4. Attach the air cleaner filter to the air cleaner body.
5. Install the air cleaner cap, and then fix it securely with the clips.

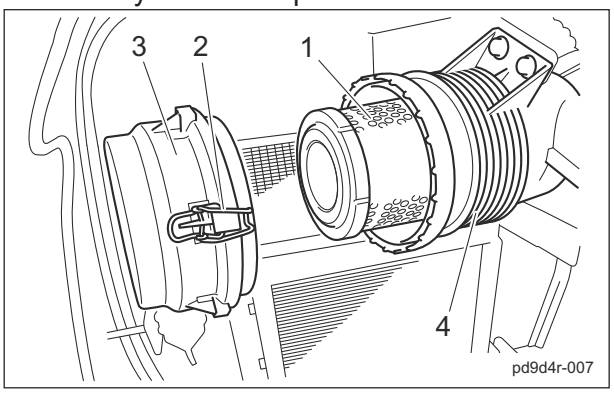

pd9d4r-007

1	Air cleaner filter
2	Clip
3	Air cleaner cap
4	Air cleaner body

Inspection of Belt

Warning

The engine must be stopped when the belt is inspected.

Important

A slacking or damaged belt or damaged fan may cause overheating or lack of a battery charge.

1. Check the belt tension.
2. Make sure that there are no cracks and damage on the belt.
3. Make sure that there is no abnormal wear on the belt.

Main Vehicle

Inspection of Hydraulic Hoses and Pipes

> **Warning**
>
> When checking the hydraulic circuit for pinhole leaks or oil leakage from nozzles, do not use your hands. Use items such as paper or corrugated cardboard to find leakage points.
> Be extremely careful with high-pressure oil as it may pierce your skin, resulting in personal accidents.
> If fluid is injected into the skin it must be surgically removed within a few hours by a doctor familiar with this form of injury or gangrene may result.

1. Make sure that there is no wear, deterioration or damage in the hydraulic hoses and pipes.
2. Make sure that there is no looseness in the connecting portion of the hydraulic hoses and pipes.
3. Check underneath the machine for hydraulic oil leakage.

Inspection of Electrical Wiring

> **Important**
>
> Electrical short circuit will cause fire, electrical leakage and malfunction of electrical equipments.

1. Make sure that there is no defacement in wires and terminals.
2. Make sure that there is no deterioration or damage in wires and terminals.
3. Make sure that there is no looseness in wiring connections.
4. Make sure that there is no poor terminal connection.

Inspection of Wheel Mounting Bolt

> **Important**
>
> Tighten the wheel mounting bolts on the specified torque by using a torque wrench.

1. Check the wheel mounting bolts and wheel nuts for looseness and coming off.
2. Check the wheel mounting bolts and wheel nuts for cracks and damages.
3. Check the wheel mounting bolts and wheel nuts for rust.
4. Check around the wheel mounting bolts and wheel nuts for traces of rust fluid.
5. Check the wheel mounting bolts for unequal bolt length.
6. Check the wheel mounting bolts and wheel nuts for stripped threads and abrasion.

Supplying Fluids

Engine

Supply of Engine Oil

> **Important**
>
> Do not supply too much engine oil. Otherwise, the engine may be damaged.

> **Important**
>
> Do not mix different types of engine oil.

> **Important**
>
> Be sure to use engine oil that is classified as API Service Grade CF or higher, with an SAE Viscosity that is appropriate for the operating environment (ambient temperature).

> **Important**
>
> Securely install the oil level gauge and oil filler cap.

If the engine oil level is lower than the lower limit line on the oil level gauge, supply engine oil.
Supply engine oil through the oil filler port.

1. Place the machine so that the engine is level.
2. Stop the engine.

3. Remove the oil filler cap.

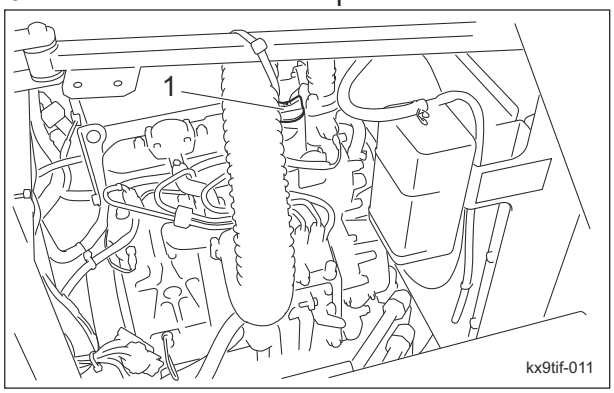

kx9tif-011

1	Oil filler cap

4. Supply new engine oil through the oil filler port.
   Supply oil until it reaches a level in between the upper and lower limit lines on the oil level gauge.
5. Install the oil filler cap.
6. It will take a while for the supplied engine oil to descend into the oil pan.
   Check the oil level again 10 to 20 minutes after supplying the oil.
   If the engine oil level is low, supply oil until it reaches the specified level.

Supply of Coolant

Caution

Do not touch the radiator or coolant during engine operation or right after the engine has been turned off.
Due to high temperatures, doing so could cause burns.

Caution

Supply coolant after the engine has well cooled down.

Caution

The radiator cap is pressurized.
If you remove the radiator cap while the engine is overheated, hot steam will burst out, possibly resulting in burns.
Make sure that the water temperature and pressure are reduced, and then grab the cap with a thick cloth and gradually open the cap.

Important

When you supply coolant, be sure to mix clean water and antifreeze (long-life coolant), and then pour it into the radiator and reserve tank.

Important

Tightly close the radiator cap.
If the cap is loose or incorrectly installed, the engine will be overheated due to water leakage, resulting in engine damage.

When mixing antifreeze and clean water, refer to "Relationship between concentration of long-life coolant (LLC) and freezing temperature" below for the mixing ratio.
Relationship between concentration of long-life coolant (LLC) and freezing temperature

Freezing temperature	LLC concentration (volume %)
Down to -10 °C (14 °F)	20 %
Down to -15 °C (5 °F)	30 %
Down to -20 °C (-4 °F)	35 %
Down to -25 °C (-13 °F)	40 %

1. If the coolant level in the reserve tank is lower than the "LOW" mark, open the reserve tank cap and fill the tank with clean water and antifreeze up to the "FULL" mark.

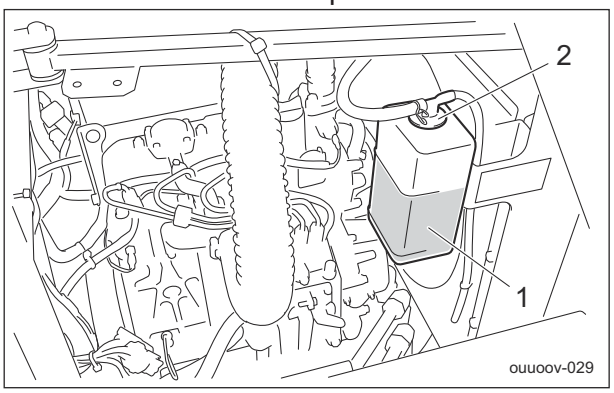

ouuoov-029

1	Reserve tank
2	Reserve tank cap

2. If no coolant is in the reserve tank, follow the steps below to fill the tank with clean water and antifreeze.
   [1] Open the radiator cap, and then supply clean water and antifreeze up to the opening.

[2] Open the reserve tank cap, and then supply clean water and antifreeze up to the "FULL" mark.

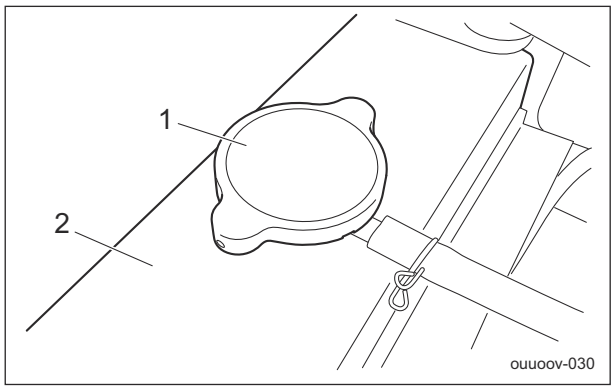

ouuoov-030

1	Radiator cap
2	Radiator

Main Vehicle

Supply of Hydraulic Oil

> **Important**
>
> Do not mix different types of oil.

> **Important**
>
> For the hydraulic oil to be used, consult Characteristics of Hydraulic Oil and use the oil whose characteristics are equivalent or superior to those specified there.
> Especially regarding kinematic viscosity and viscosity index, use of hydraulic oil whose figures are less than those of the specified hydraulic oil will cause a malfunction in the hydraulic circuit.

> **Important**
>
> Supply hydraulic oil after checking the oil in the hydraulic tank has been sufficiently cooled down.
> Oil level changes depending on the hydraulic oil temperature.

■ Characteristics of Hydraulic Oil

ISO Viscosity Grade		ISO VG46
Density	15 °C (59 °F)	0.873 g/cm^3 (0.0315 lb/in^3)
API Gravity		30.6
Flash Point (Open Cup)		230 °C (446 °F)
Pour Point		-30 °C (-22 °F)
Kinematic Viscosity	40 °C (104 °F)	46 mm^2/s (46 cSt)
	100 °C (212 °F)	7 mm^2/s (7 cSt)
Viscosity Index		109

■ Characteristics of Hydraulic Oil with conditions of use
Hydraulic oil of ISO viscosity grade VG68 can be used only if the following condition is met:

・The outside temperature must be 20 °C (68 °F) or more during engine operation.

ISO Viscosity Grade		ISO VG68
Density	15 °C (59 °F)	0.878 g/cm^3 (0.0318 lb/in^3)
API Gravity		29.7
Flash Point (Open Cup)		252 °C (486 °F)
Pour Point		-30 °C (-22 °F)
Kinematic Viscosity	40 °C (104 °F)	68 mm^2/s (68 cSt)
	100 °C (212 °F)	9 mm^2/s (9 cSt)
Viscosity Index		107

Note:
In Japan, "Shell Tellus S2M46 (ISO VG46)" and "Shell Tellus S2M68 (ISO VG68)" meet the characteristics described above, however, in other countries the specification of Shell Tellus S2M46 and Shell Tellus S2M68 can be below what is required.
Please check the product data sheet to ensure that it meets the requirements before using.

1. Lower the mower unit on a level surface, and stop the engine.
2. Open the center cover.
3. If the hydraulic oil level is low, follow the steps below to supply oil.
   ■ #10001 - 10120
   [1] Open the tank cap.
   [2] Supply hydraulic oil through the oil filling port until the oil level reaches the middle of the oil gauge on the hydraulic tank.

[3] Tighten the tank cap securely.

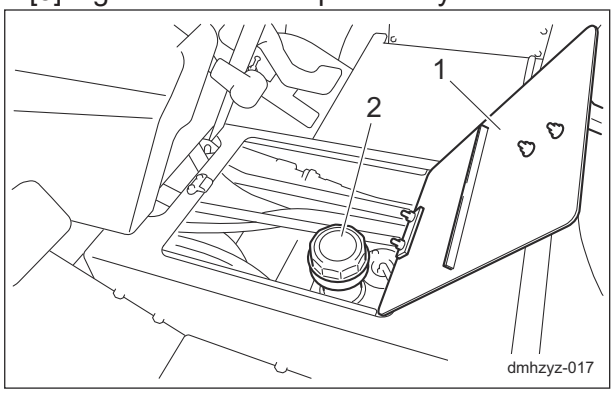

dmhzyz-017

1	Center cover
2	Tank cap

■ #10121-

[1] Loosen the bushing with a wrench (included tool) and remove the oil filler plug.

[2] Supply hydraulic oil through the oil filling port until the oil level reaches the middle of the oil gauge on the hydraulic tank.

[3] Install the oil filler plug and tighten the bushing securely.

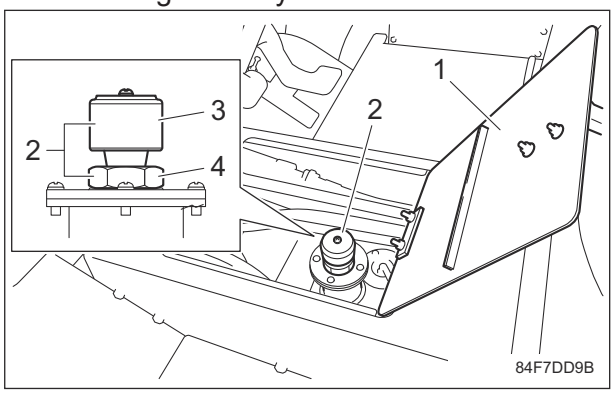

84F7DD9B

1	Center cover
2	Oil filler plug
3	Air breather
4	Bushing

4. Close the center cover.
5. Start the engine, and then repeat the steps below a few times.
   - Raise and lower the mower units.
   - Turn the steering wheel left and right.
   - Move forward and reverse.
6. Lower the mower units and maintain that position on a level surface, and then check to see if the oil level is at the middle of the oil gauge. If necessary, supply oil.
7. Check underneath the machine for oil leakage.

Supply of Battery Fluid

Danger

If battery fluid comes into contact with eyes, it may result in blindness. Immediately flush with plenty of water and take medical care from an ophthalmologist.

Danger

Do not drink battery fluid.
If battery fluid enters the mouth or is swallowed, it may result in burns inside the mouth. Immediately and repeatedly gargle with plenty of water, then drink plenty of water, and take medical care.

Danger

When you supply battery fluid, wear protective garments and safety glasses, etc.

Warning

If battery fluid adheres to the skin or clothing, it may cause burns or damage clothing. Immediately flush with plenty of water, then wash thoroughly with soap.

Warning

Do not allow the battery fluid level to become lower than the LOWER LEVEL (minimum fluid level line).
The battery may explode if it is used or charged while the battery fluid level is at the LOWER LEVEL (minimum fluid level line).

Warning

When refilling, do not fill purified water above the UPPER LEVEL (maximum fluid level line). Doing so may result in electrolyte leaks.

Caution

Implement after the engine and muffler etc. have well cooled down.
Otherwise, you may get burned.

Important

If battery fluid adheres to the vehicle, it may cause corrosion.
Wipe it off with a cloth dampened with water, and then flush with water.

If the battery fluid level is lower than halfway between the UPPER LEVEL (maximum fluid level line) and LOWER LEVEL (minimum fluid level line), add purified water.

1. Loosen the vent plug and remove it.
2. Add purified water up to the UPPER LEVEL (maximum fluid level line)
3. Tighten the vent plug securely.

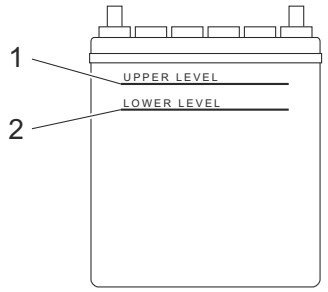

48yhlu-006

1	Maximum fluid level line
2	Minimum fluid level line

Greasing

About Greasing

Since there may be adhesion or damage due to lack of grease on moving parts, they must be greased.
Add urea-based No. 2 grease in accordance with the Maintenance Schedule.
Other locations where the specified grease or lubricant is used are indicated in "Greasing Points".
Add grease using the specified grease or lubricant.

Greasing Points

Grease nipples are installed in the following locations.
Add grease every 50 hours of operation.
If specified locations, periods and grease are additionally described below, follow the instructions.

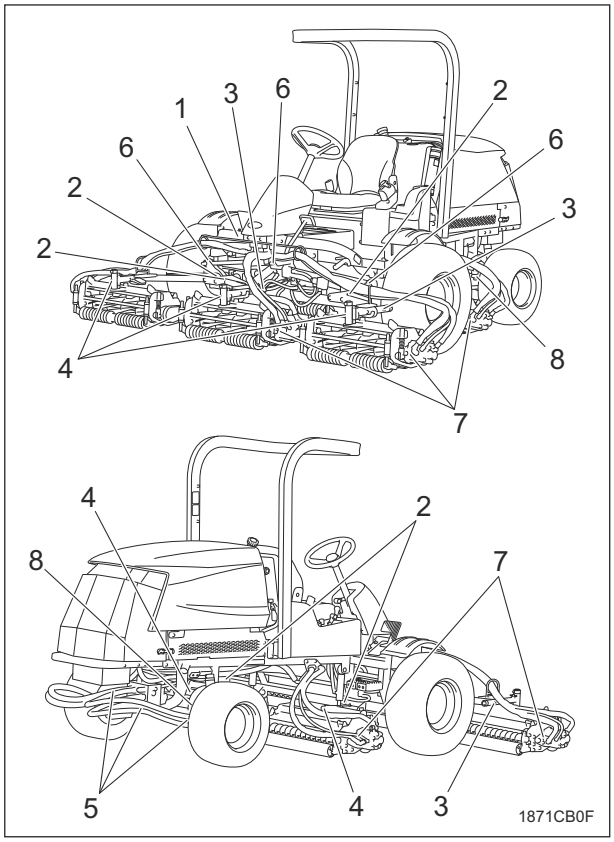

1871CB0F

	Location	No. of greasing points
1	Pedal shaft fulcrum	2
2	Lift arm fulcrum	5
3	Lift arm fulcrum shaft	3
4	Mower unit fulcrum	5
5	Pivot	3
6	Cylinder shaft	4
7	Reel motor shaft	5
8	Tie rod end (#10196-)	2

1. Pedal shaft fulcrum
   There are two greasing points.

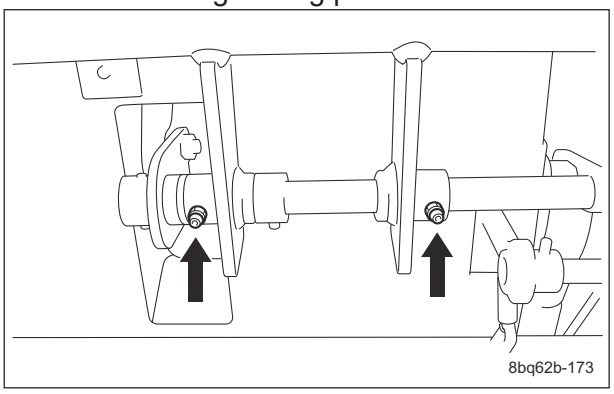

8bq62b-173

2. Lift arm fulcrum
   There is one greasing point on each lift arm fulcrum (main vehicle side) connected to the mower unit.
   Before greasing a lift arm fulcrum, lower the mower unit.
   Mower units #1 and 4

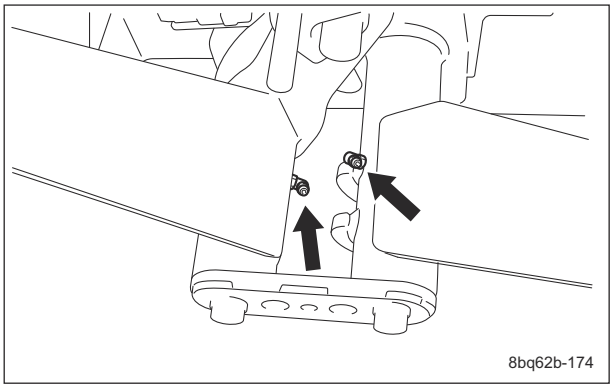

8bq62b-174

Mower unit #5

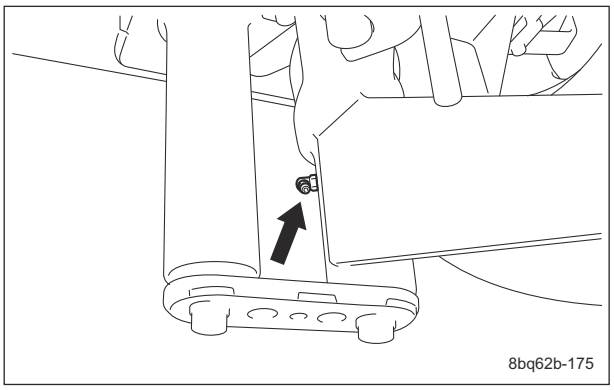

8bq62b-175

Mower unit #2 and 3

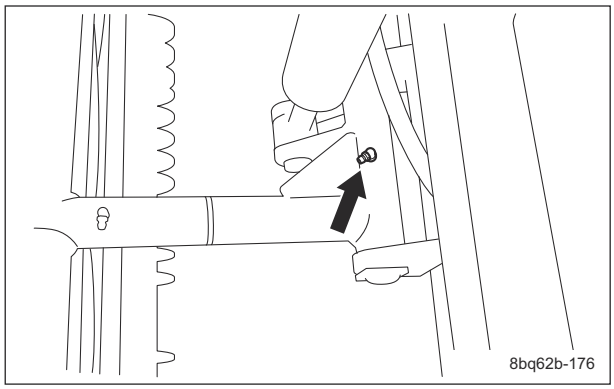

8bq62b-176

3. Lift arm fulcrum shaft
   There is one greasing point on each lift arm fulcrum shaft (mower arm side) connected to the mower unit #1, 4 and 5.

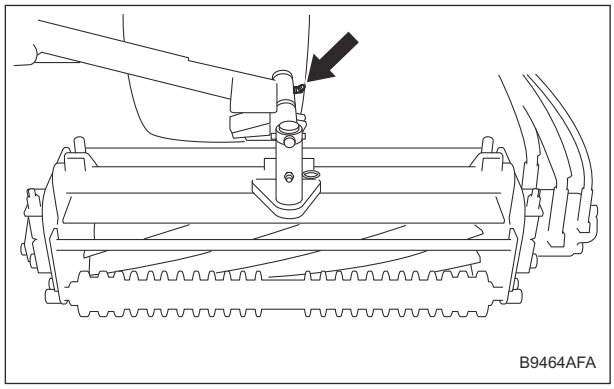

B9464AFA

4. Mower unit fulcrum
   There is one greasing point on each mower unit.

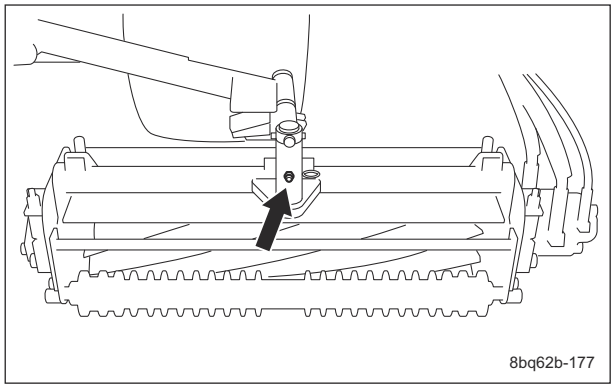

8bq62b-177

5. Pivot
   There are three greasing points.
   Middle between rear wheels

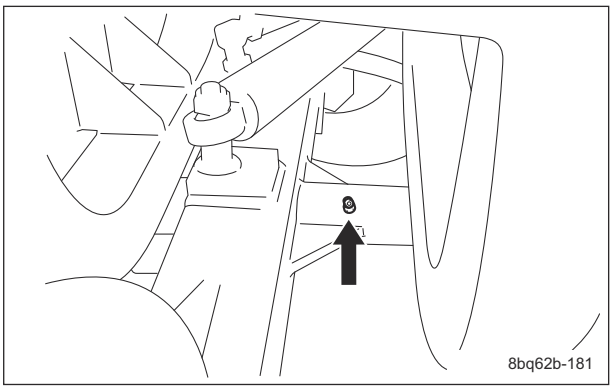

8bq62b-181

Rear left wheel

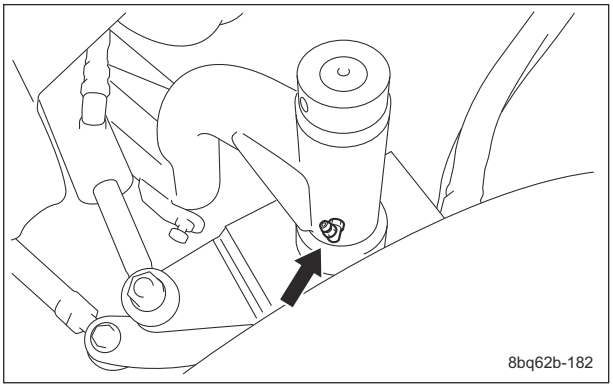

8bq62b-182

Rear right wheel

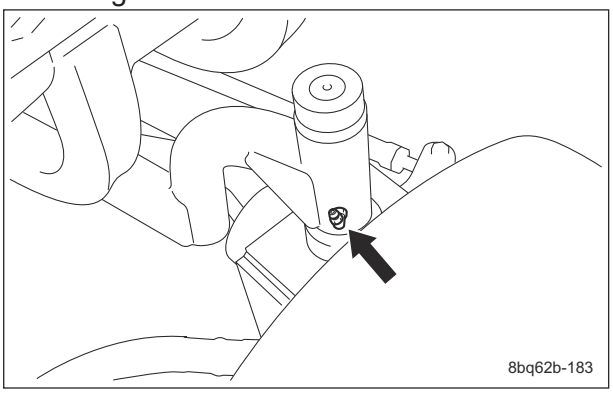

8bq62b-183

6. Cylinder shaft
   Cylinder shaft #1
   There are two greasing points on the cylinder shaft.

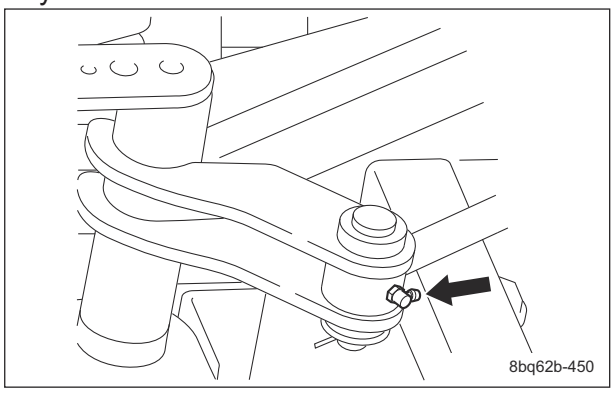

8bq62b-450

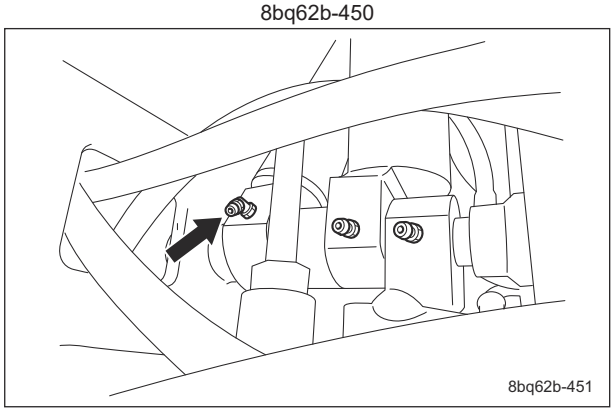

8bq62b-451

   Cylinder shafts #4 and 5
   There is one greasing point each on the cylinder shafts.

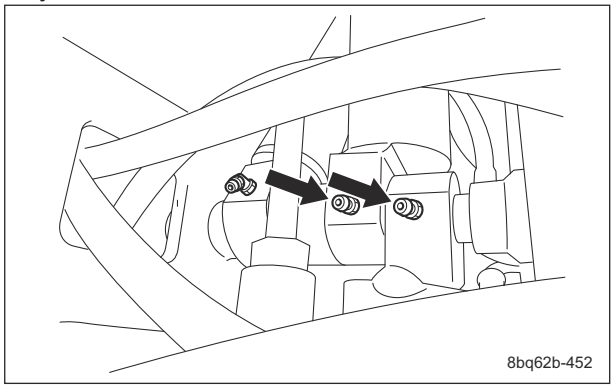

8bq62b-452

7. Reel motor shaft
   Apply 2 g (0.004 lb) of MOLY SPEED GREASE NO.2 to the reel mower shaft mounted on each mower unit every 250 hours.

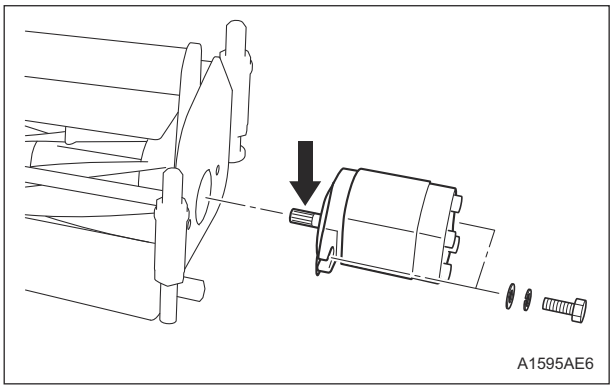

A1595AE6

8. Tie rod end
   There is one point each on the left and right tie rod ends.
   Add 9 g (0.02 lb) of DYNAMAX GREASE EP NO.1 every 3 months of operation.
   Note :
   Add grease with the steering wheel turned to the left/right completely.
   The appropriate greasing amount is that it sticks out a little from the tie rod end rubber boot.

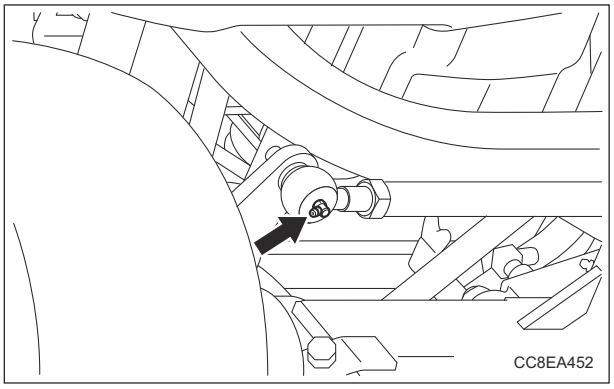

CC8EA452

Lubrication

About Lubrication

It is necessary to lubricate moving parts so that they will not become stuck or damaged.
The locations where lubricant is used are indicated in "Lubricating Points".
Apply the lubricant.

Lubricating Points

Apply lubricant at the following locations every 50 hours of operation.

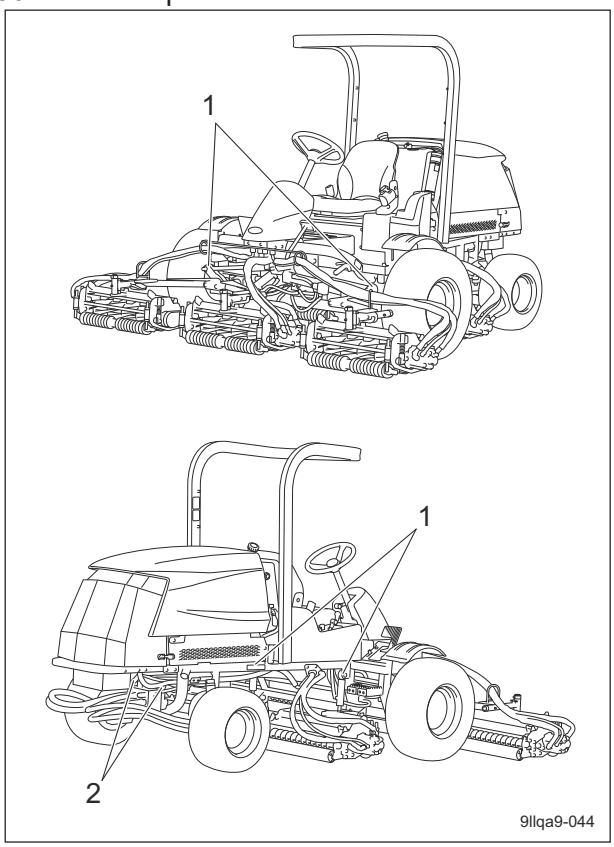

9llqa9-044

	Location	No. of greasing points
1	Mower cylinder spherical bearing	4
2	Steering cylinder spherical bearing	2

1. Mower cylinder spherical bearing
   There is one point on each mower cylinder.
   Mower cylinder #2 and 3

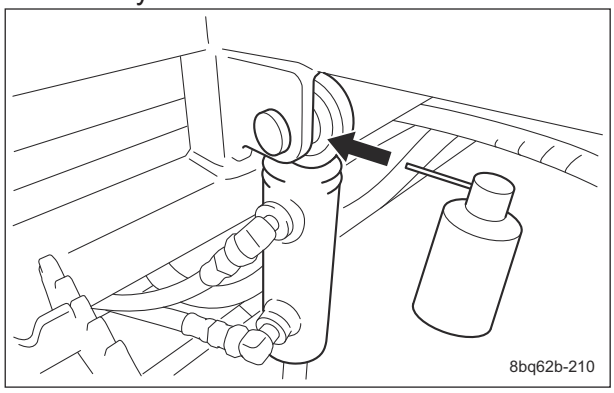

8bq62b-210

Mower cylinder #4 and 5

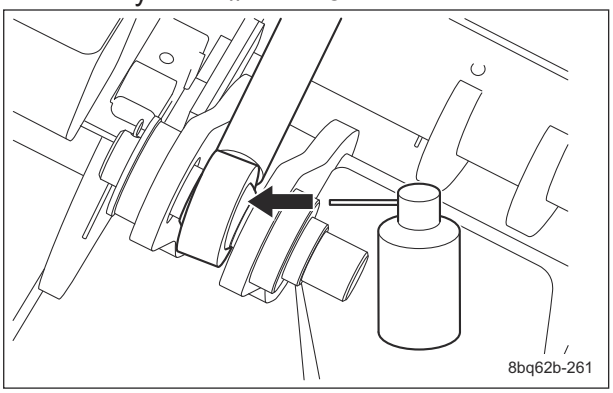

8bq62b-261

2. Steering cylinder spherical bearing
   Middle between rear wheels

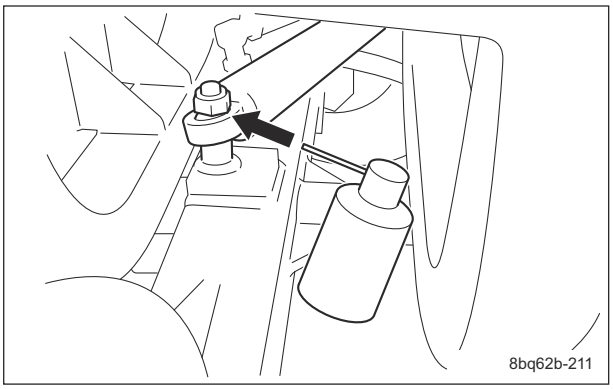

8bq62b-211

Rear left wheel

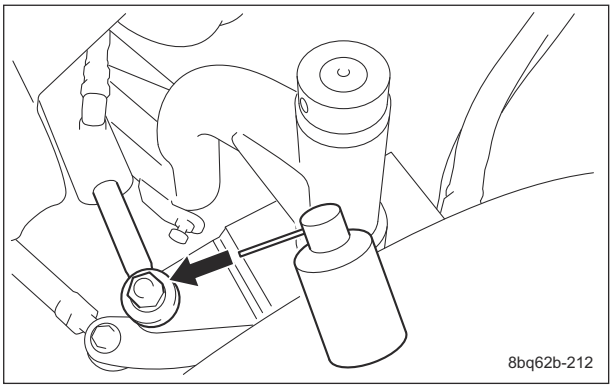

8bq62b-212

Adjustment

Engine

Adjustment of Fan Belt Tension

Warning

Be sure to stop the engine before adjusting the belt.

Warning

If you have removed covers, etc., be sure to securely install them in their original positions. If covers, etc., remain removed, the operator or the mechanic may come in contact with rotating parts or belts, or foreign objects may fly off, possibly resulting in injuries.

Important

For the specified value of belt tension, refer to Adjusted Values.
Check belt tension after rotating the belt several times.

Important

A slacking or damaged fan belt will cause overheating or lack of battery charge.
Adjust or replace the belt.

▪Adjustment of Fan Belt

For fan belt adjustment, follow either of the methods below.

1. Adjustment on the basis of belt slack deviation when applying a specified load to a specified place
   [1] Press the middle of the belt with your finger to check the belt tension.
   The belt tension is appropriate when the belt slacks by approximately 10 mm (0.39 in) when you apply a force of 98 N (10 kgf) to the belt at the middle point between the pulleys.
   [2] If the belt tension is incorrect, loosen bolt A, nut and bolt B for securing the alternator, and then move the alternator to adjust the tension.
   [3] Be sure to tighten bolt A, nut and bolt B securely after adjustment.
   [4] After adjustment of belt tension, check the belt tension again.
   If the belt tension is still not at the appropriate value after repeating the adjustment several times, replace the belt with a new one.

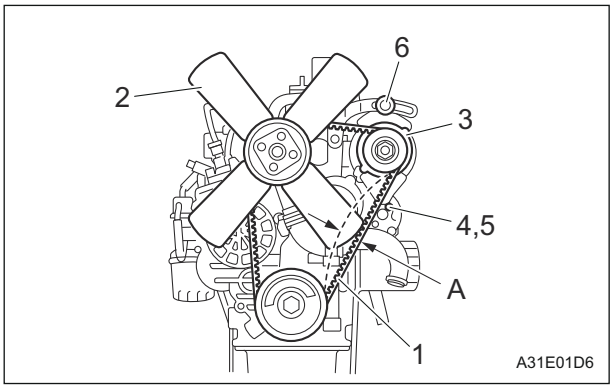

A31E01D6

1	Fan Belt
2	Blade
3	Alternator
4	Bolt A
5	Nut
6	Bolt B
A	10 mm (0.39 in)

2. Adjustment to suitable belt tension force by using sonic type tension meters at a specified point

Important

Perform correct measurement in accordance with the operations manual of the equipment being used for tension measurement.

Important

Perform measurement immediately after mounting the belt, when the pulley is not rotating.

[1] Measure belt tension force by using a sonic type tension meter.
For measurement position and distance between pulleys, see diagram below.
Here is the suitable belt tension force.

Adjustment	200 - 300 N (20.39 - 30.59 kgf)
Replacement	267 - 361 N (27.23 - 36.81 kgf)

[2] If the belt tension is inappropriate, loosen bolt A, nut and bolt B for securing the alternator, and then move the alternator to adjust the tension.

[3] Be sure to tighten bolt A, nut and bolt B securely after adjustment.

[4] After adjustment of belt tension, check the belt tension again.
If the belt tension is still not at the appropriate value after repeating the adjustment several times, replace the belt with a new one.

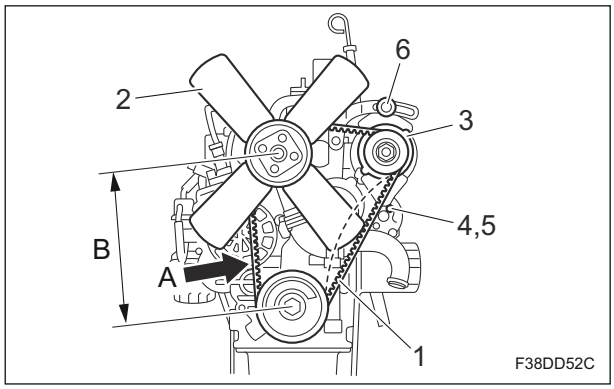

F38DD52C

1	Fan belt
2	Blade
3	Alternator
4	Bolt A
5	Nut
6	Bolt B
A	Measurement position
B	Distance between pulleys

Replacement

Engine

Replacement of Engine Oil

Warning

When you change the engine oil, be sure to drain it into a bowl and discard it in accordance with local laws and regulations.

Caution

Be careful with hot oil, which could cause burns if it contacts your skin.

Important

Be sure to use engine oil that is classified as API Service Grade CF or higher, with an SAE Viscosity that is appropriate for the operating environment (ambient temperature).

Important

Securely install the oil level gauge and oil filler cap.

Change the engine oil more frequently if the engine oil is contaminated, and especially if you use the machine in dusty areas or operate the engine at high loads or in high temperatures.

1. Follow the steps below to remove the old engine oil.
   [1] Start and run the engine to warm up the engine oil.
   [2] Stop the engine on a level surface.
   [3] Remove the drain plug and then drain the old engine oil into a container.

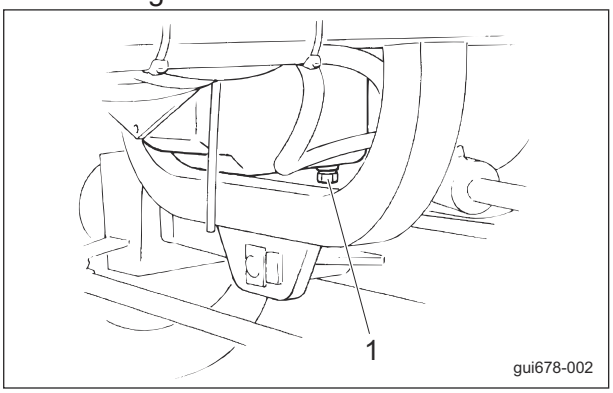

gui678-002

1	Drain plug

   [4] Re-place the drain plug.
2. Remove the oil filler cap, and then supply new engine oil until the oil reaches a level in between the upper and lower limit lines on the oil level gauge.
   Engine oil quantity is approximately 3.1 dm^3 (3.1 L).
3. Securely install the oil filler cap.

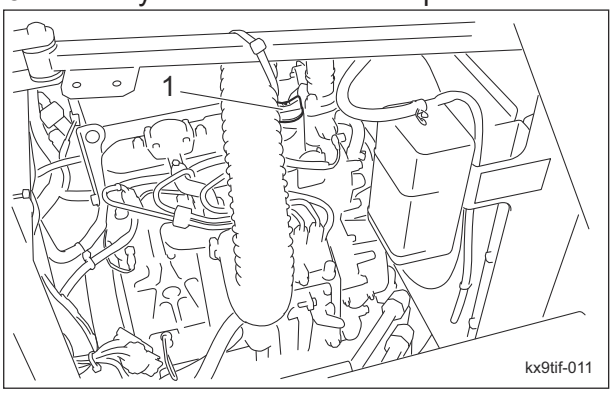

kx9tif-011

1	Oil filler cap

4. It will take a while for the supplied engine oil to descend into the oil pan.
   Check the oil level again 10 to 20 minutes after supplying the oil.
5. Check underneath the machine for hydraulic oil leakage.

Replacement of Engine Oil Filter

Caution

Be careful with hot oil, which could cause burns if it contacts your skin.

Important

When replacing the engine oil filter, be sure to drain the engine oil into a container and discard it in accordance with local laws and regulations.

Important

Be sure to use engine oil that is classified as API Service Grade CF or higher, with an SAE Viscosity that is appropriate for the operating environment (ambient temperature).

Important

Securely install the oil level gauge and oil filler cap.

1. With the filter wrench, remove the old filter cartridge.

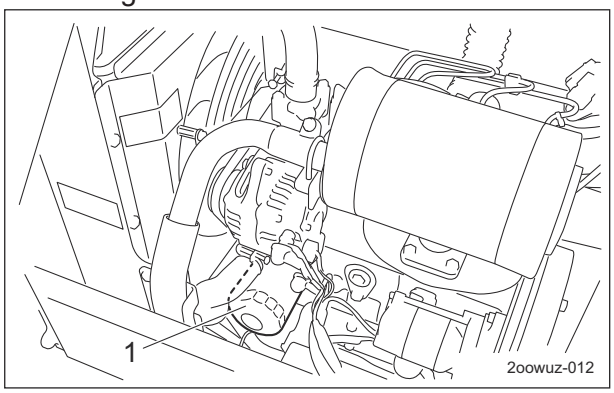

2oowuz-012

1	Filter cartridge

2. Lightly coat the packing of the new filter cartridge with engine oil.
3. Hand-tighten the filter cartridge until the packing contacts the sealing surface, and then firmly hand-tighten (without using a filter wrench).
4. Supply engine oil until it reaches the specified level.
   "Supply of Engine Oil" (Page 6-8)
5. Start the engine, and then stop it after 10 to 20 minutes.
6. Make sure that there is no oil leakage at the sealing surface of the filter cartridge.
7. Check the engine oil level.
   If it is low, supply engine oil until it reaches the specified level.

Replacement of Fuel Filter Element

1. Close the fuel filter cock.

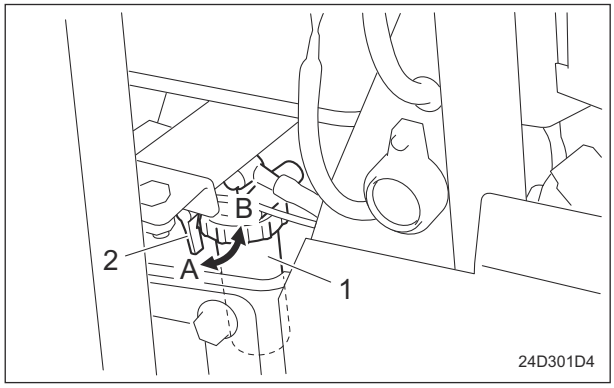

24D301D4

1	Fuel filter
2	Fuel cock
A	ON (Open)
B	OFF (Close)

2. Remove the retaining ring and then remove the cup.

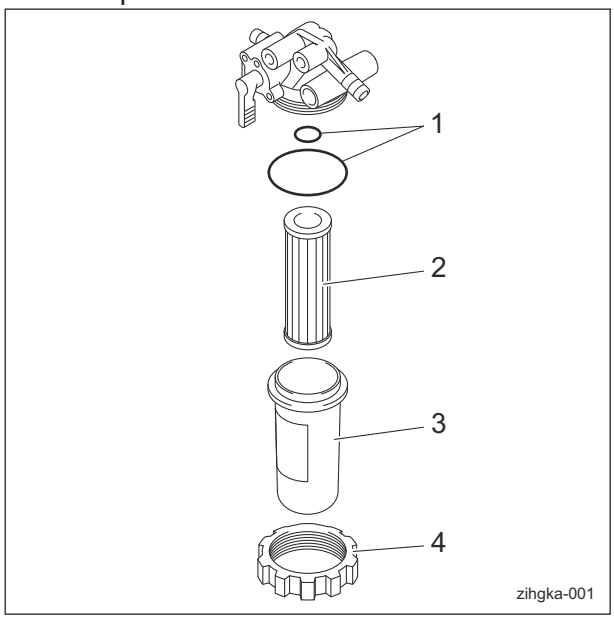

zihgka-001

1	O-ring
2	Element
3	Cup
4	Retaining ring

3. Clean inside of the cup with diesel fuel.

> **Important**
>
> When installed, be careful that it is not contaminated with dirt or dust.
> If the fuel is contaminated with dirt or dust etc., the fuel injection pump and injection nozzle will become worn.

4. Install a new element and put the parts back together.
5. Fill up the fuel tank with fuel and open the fuel cock.

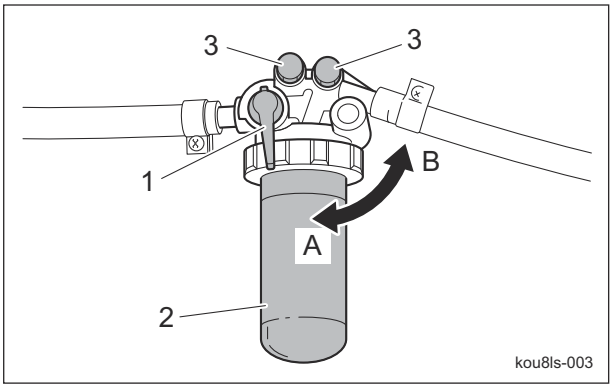

kou8ls-003

1	Fuel cock
2	Fuel filter
3	Air-bleeding plug
A	ON (Open)
B	OFF (Close)

6. Turn the key switch to the "ON" position. When the fuel pump is operated after replacement, air bleeding will occur automatically.
7. Turn the ignition key to the "START" position and remove air out of the fuel line.
8. If the engine does not start within 15 seconds after switching the ignition key to the "START" position, wait at least 30 seconds, and then repeat the same operation.

Replacement of Air Cleaner Element

Important

A contaminated air cleaner element may cause malfunction of the engine.

1. The timing for replacing the air cleaner element is described below.
   [1] Replace the air cleaner element in accordance with the Maintenance Schedule.
   [2] If it is significantly contaminated, replace it, even if the hours of operation do not exceed the specified time.
2. Replace the air cleaner element by following the same steps as for cleaning the air cleaner element.
   "Cleaning of Air Cleaner Element" (Page 6-7)

Replacement of Coolant

Caution

Do not touch the radiator or coolant during engine operation or immediately after the engine has been turned off.
Otherwise, you may get burned.

Caution

Change coolant after the engine has well cooled down.

Caution

The radiator cap is pressurized.
If you remove the radiator cap while the engine is overheated, hot steam will burst out, possibly resulting in burns.
Make sure that the water temperature and pressure are reduced, and then grab the cap with a thick cloth and gradually open the cap.

Important

When changing the coolant, be sure to drain it into a container and discard it in accordance with local laws and regulations.

Important

When changing the coolant, be sure to mix clean water (soft water) and antifreeze (long-life coolant), and then pour it into the radiator and reserve tank.

Important

Tightly close the radiator cap.
If the cap is loose or incorrectly installed, the engine will be overheated due to water leakage, resulting in engine damage.

When mixing antifreeze and clean water (soft water), refer to "Relationship between concentration of long-life coolant (LLC) and freezing temperature" below for the mixing ratio.
Relationship between concentration of long-life coolant (LLC) and freezing temperature

Freezing temperature	LLC concentration (volume %)
Down to -10 °C (14 °F)	20 %
Down to -15 °C (5 °F)	30 %
Down to -20 °C (-4 °F)	35 %
Down to -25 °C (-13 °F)	40 %

1. Stop the engine, and then allow the radiator to cool.
2. Open the hood.
3. Follow the steps below to drain the coolant.
   [1] Position a container to drain the coolant into.
   [2] Loosen the drain cock of the radiator.

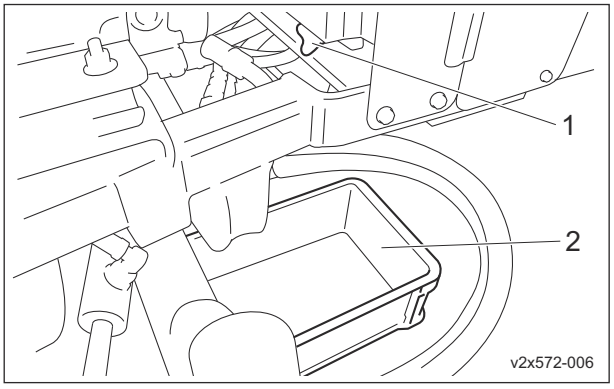

v2x572-006

1	Radiator drain cock
2	Container

[3] Remove the radiator cap and drain the coolant.

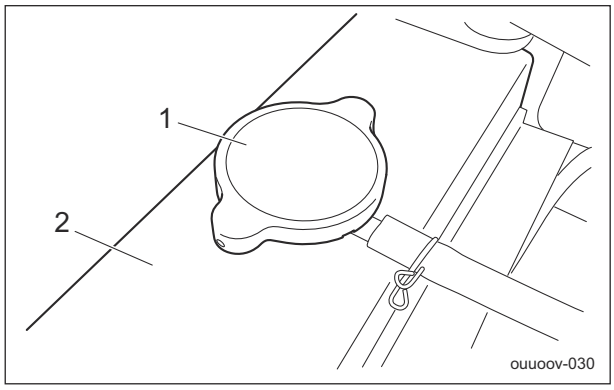

ouuoov-030

1	Radiator cap
2	Radiator

[4] Remove the reserve tank.

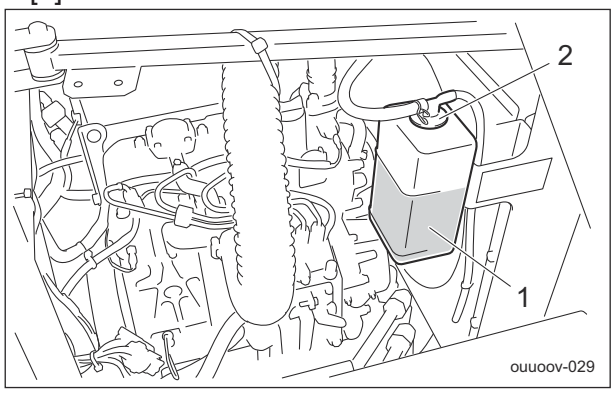

ouuoov-029

1	Reserve tank
2	Reserve tank cap

[5] Open the reserve tank cap, and then drain the coolant.

4. Install the reserve tank.
5. Clean the radiator with clean water (soft water) to remove any debris or rust.
6. Drain all water from the radiator.
7. Follow the steps below to fill with coolant. The coolant quantity, including the reserve tank, is 6.0 dm^3 (6.0 L).
   [1] Install the drain plug.
   [2] Supply clean water (soft water) and antifreeze into the radiator up to the radiator cap opening.
   [3] Close the radiator cap.
   [4] Supply clean water (soft water) and antifreeze into the reserve tank up to the "FULL" mark.
   [5] Close the reserve tank cap.
8. Start the engine, and then idle for several minutes to bleed air from the system.
9. Stop the engine, and then allow the radiator to cool.
10. Check if the coolant level in the reserve tank is between "FULL" and "LOW", and then supply coolant if necessary.
11. Close the hood.

Main Vehicle

Replacement of Hydraulic Oil

Caution

Be careful with hot oil, which could cause burns if it contacts your skin.

Important

When you change the hydraulic oil, be sure to drain it into a bowl and discard it in accordance with local laws and regulations.

Important

If the oil emulsifies or if it becomes even slightly less transparent, change the oil immediately.

Important

For the hydraulic oil to be used, consult Characteristics of Hydraulic Oil and use the oil whose characteristics are equivalent or superior to those specified there.
Especially regarding kinematic viscosity and viscosity index, use of hydraulic oil whose figures are less than those of the specified hydraulic oil will cause a malfunction in the hydraulic circuit.

■ Characteristics of Hydraulic Oil

ISO Viscosity Grade		ISO VG46
Density	15 °C (59 °F)	0.873 g/cm^3 (0.0315 lb/in^3)
API Gravity		30.6
Flash Point (Open Cup)		230 °C (446 °F)
Pour Point		-30 °C (-22 °F)
Kinematic Viscosity	40 °C (104 °F)	46 mm^2/s (46 cSt)
	100 °C (212 °F)	7 mm^2/s (7 cSt)
Viscosity Index		109

■ Characteristics of Hydraulic Oil with conditions of use
Hydraulic oil of ISO viscosity grade VG68 can be used only if the following condition is met:

・The outside temperature must be 20 °C (68 °F) or more during engine operation.

ISO Viscosity Grade		ISO VG68
Density	15 °C (59 °F)	0.878 g/cm^3 (0.0318 lb/in^3)
API Gravity		29.7
Flash Point (Open Cup)		252 °C (486 °F)
Pour Point		-30 °C (-22 °F)
Kinematic Viscosity	40 °C (104 °F)	68 mm^2/s (68 cSt)
	100 °C (212 °F)	9 mm^2/s (9 cSt)
Viscosity Index		107

Note:
In Japan, "Shell Tellus S2M46 (ISO VG46)" and "Shell Tellus S2M68 (ISO VG68)" meet the characteristics described above, however, in other countries the specification of Shell Tellus S2M46 and Shell Tellus S2M68 can be below what is required.
Please check the product data sheet to ensure that it meets the requirements before using.

1. Follow the steps below to remove the old oil.
   [1] Start and run the engine to warm up the oil.
   [2] Lower the mower units on a level surface, and then stop the engine.
   [3] Remove the drain plug of the hydraulic tank, and then drain the old oil into a container.
   [4] Wind new sealing tape on the drain plug, and then attach it to the hydraulic tank.

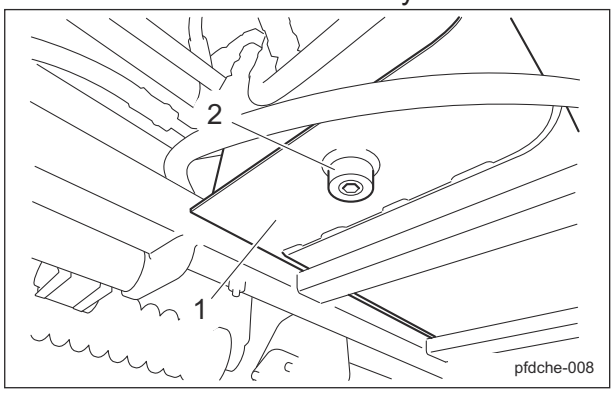

pfdche-008

1	Hydraulic tank
2	Drain plug

2. Open the center cover.
3. Follow the steps below to supply new oil. The hydraulic tank capacity is approximately 35.0 dm^3 (35.0 L).
   ■ #10001-10120
   [1] Open the tank cap.
   [2] Supply hydraulic oil through the oil filling port until the oil level reaches the middle of the oil gauge on the hydraulic tank.
   [3] Tighten the tank cap securely.

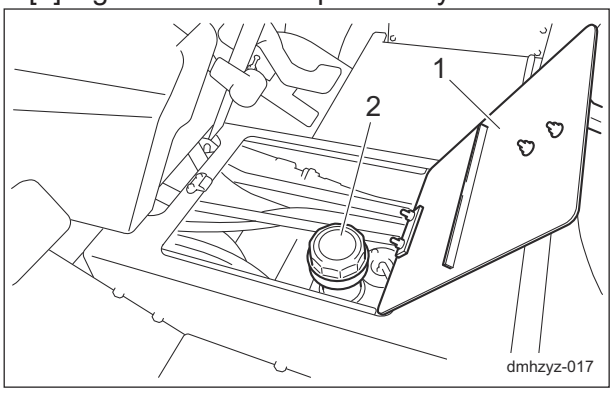

dmhzyz-017

1	Center cover
2	Tank cap

■ #10121-
[1] Loosen the bushing with a wrench (included tool) and remove the oil filler plug.
[2] Supply hydraulic oil through the oil filling port until the oil level reaches the middle of the oil gauge on the hydraulic tank.
[3] Install the oil filler plug and tighten the bushing securely.

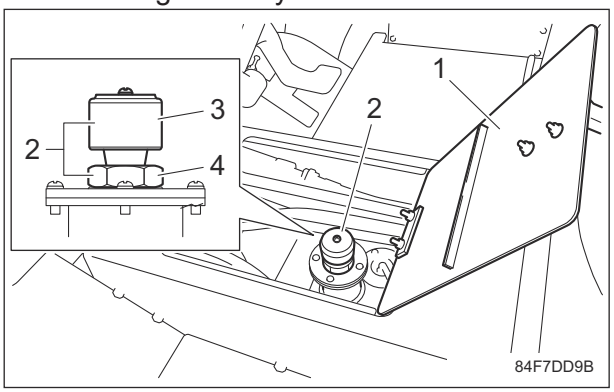

84F7DD9B

1	Center cover
2	Oil filler plug
3	Air breather
4	Bushing

4. Close the center cover.
5. Start the engine, and then repeat the steps below a few times.
   - Raise and lower the mower units.
   - Turn the steering wheel left and right.
   - Move forward and reverse.
6. Lower the mower units and maintain that position on a level surface, and then check to see if the oil level is at the middle of the oil gauge. If necessary, supply oil.
7. Check underneath the machine for oil leakage.

Replacement of Hydraulic Oil Filter

■Replacement of Hydraulic Oil Line Filter

Caution

Be careful with hot oil, which could cause burns if it contacts your skin.

Important

When replacing the hydraulic oil filter, be sure to drain the oil into a container and discard it in accordance with local laws and regulations.

Important

If the hydraulic oil emulsifies or if it becomes even slightly less transparent, change the oil immediately.

Important

Use hydraulic oil whose specification meets the requirements.

1. Lower the mower units on a level surface, and then stop the engine.
2. Remove the old filter cartridge.
3. Lightly coat the packing of the new filter cartridge with hydraulic oil, and then install the cartridge.
4. Firmly tighten the filter cartridge by hand so that the packing contacts the mounting surface.
   Then, tighten it an additional 1/2 turn.

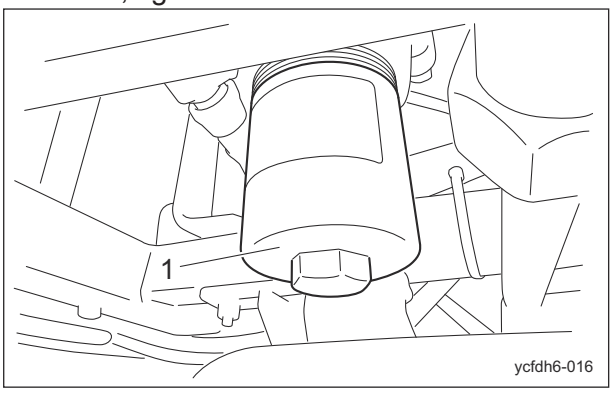

ycfdh6-016

1	Filter cartridge

5. Supply hydraulic oil until it reaches the specified level.
   "Supply of Hydraulic Oil" (Page 6-10)
6. Start the engine, and then after the hydraulic oil has warmed up, stop the engine.
7. Check underneath the machine for hydraulic oil leakage.

■Replacement of Hydraulic Oil Suction Filter

Caution

Be careful with hot oil, which could cause burns if it contacts your skin.

Important

When replacing the hydraulic oil filter, be sure to drain the oil into a container and discard it in accordance with local laws and regulations.

Important

If the hydraulic oil emulsifies or if it becomes even slightly less transparent, change the oil immediately.

Important

Use hydraulic oil whose specification meets the requirements.

Important

Replace the intake port packing with a new one.

1. On a level surface, lower the mower units, and then stop the engine.
2. Remove the center cover.
3. Remove bolts, spring washers and washers, and then remove the intake hose joint fitting.
4. Remove the old suction filter and intake port packing.
5. Remove all of the old liquid gasket from the hydraulic tank.
6. Remove all of the old liquid gasket and the intake port packing from the intake hose joint fitting.
7. Wash and clean the intake hose joint fitting.
8. Apply liquid gasket to the new intake port packing and then install it to the intake hose joint fitting.
9. Install the new suction filter to the intake hose joint fitting.
10. Install the intake hose joint fitting.

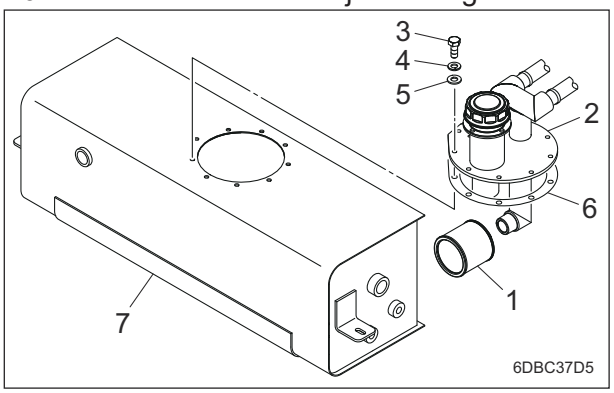

6DBC37D5

1	Suction filter
2	Intake hose joint fitting
3	Bolt
4	Spring washer
5	Washer
6	Intake port packing
7	Hydraulic tank

11. Install the center cover.
12. Supply hydraulic oil until it reaches the specified level.
    "Supply of Hydraulic Oil" (Page 6-10)
13. Start the engine and stop it after hydraulic oil warmed.
14. Check underneath the machine for hydraulic oil leakage.

Replacement of Air Breather Element

> **Caution**
>
> Be careful with hot oil, which could cause burns if it contacts your skin.

#10121-

1. Lower the mower decks on a level surface, and then stop the engine.
2. Loosen the air breather screw and remove the seal washer.

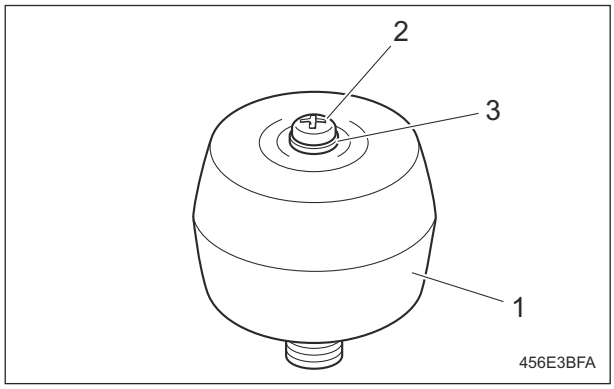

456E3BFA

1	Air breather
2	Screw
3	Seal washer

3. Remove the top cover of the air breather.
4. Remove the old element.

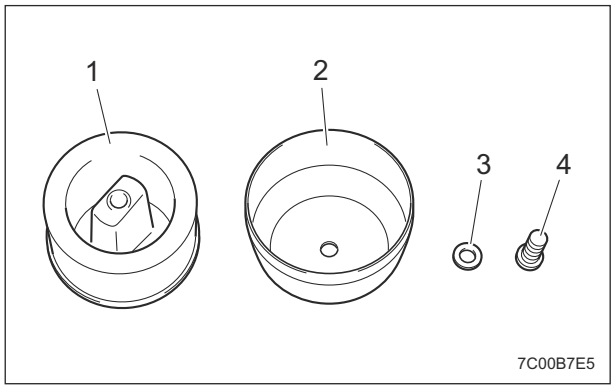

7C00B7E5

1	Element
2	Top cover
3	Seal washer
4	Screw

5. Install the new element.

> **Important**
>
> If the seal washer is damaged, replace it with a new one.

6. Install the top cover of the air breather.
7. Install the seal washer and tighten the screw.

Replacement of Resin Bushing

Resin bushings are installed in the following locations.
Replace resin bushings according to the maintenance schedule.

1. Lift arm (Mower unit #1, #4, #5)
   Note:
   The illustration shows the lift arm for mower unit #4.

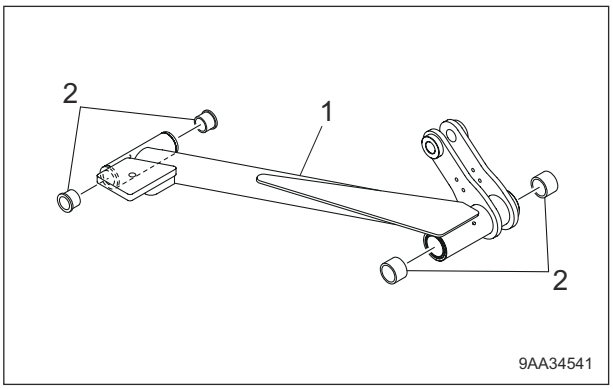

9AA34541

1	Lift arm
2	Resin bushing

Replacement of Tires

▪Replacement of Front Tires

1. Removing front tires
   Follow the steps below to remove the front tires:
   [1] Loosen the bolts.

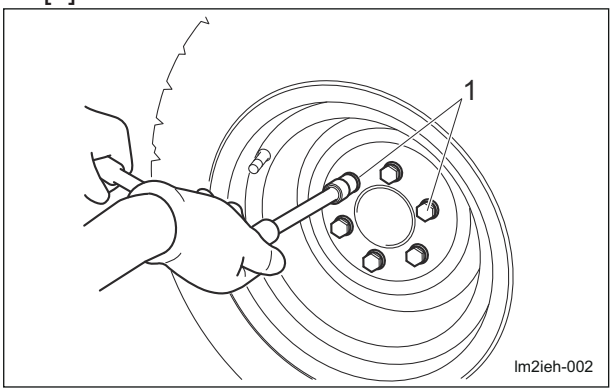

lm2ieh-002

1	Heat-treated bolt

[2] Securely place the jack beneath the jack-up point of the front left/right frame area, and then raise it until the tire lifts off the ground.
"Jack-Up Points" (Page 6-2)

[3] Remove the bolts.

[4] Remove the tire from the wheel mounting seat.

2. Installing front tires

> **Important**
>
> Tighten the bolts in the tightening order (diagonally).

> **Important**
>
> Tighten the wheel mounting bolts on the specified torque by using a torque wrench.

For installing the front tires, reverse the removing procedure.

■Replacement of Rear Tires

1. Removing rear tires
Follow the steps below to remove the rear tires:

[1] Loosen the bolts.

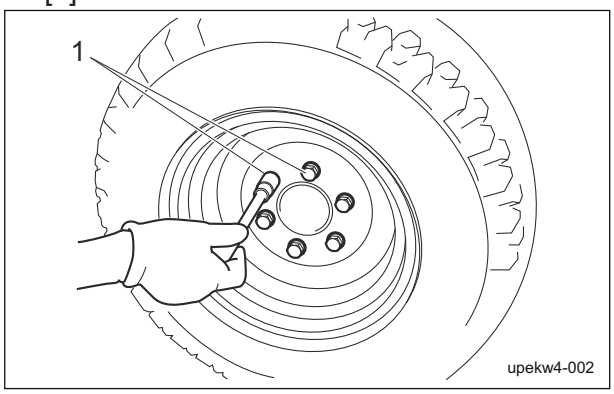

upekw4-002

1	Bolt

[2] Securely place the jack beneath the jack-up point of the rear frame area, and then raise it until the tire lifts off the ground.
"Jack-Up Points" (Page 6-2)

[3] Remove the bolts.

[4] Remove the tire from the wheel mounting seat.

2. Installing rear tires

> **Important**
>
> Tighten the bolts in the tightening order (diagonally).

> **Important**
>
> Tighten the wheel mounting bolts on the specified torque by using a torque wrench.

For installing the rear tires, reverse the removing procedure.

Storage

Long-Term Storage

Follow the instructions below for long-term storage of the machine.

1. Cleaning
   - Remove dirt, grass clippings, oil stains etc. completely from the main vehicle and engine.
2. Replacing oil
   - Inspect and replace the engine oil, hydraulic oil and element.
3. Greasing and lubricating
   - Supply oil and apply grease to appropriate parts.
4. Battery
   - Remove the negative battery wire.
5. Fuel
   - Remove the fuel from the fuel tank.
6. Tire pneumatic pressure
   - Set the tire air pressure slightly higher than normal, and then place the machine on a board to avoid humidity.
7. Mower units
   - When storing this machine, lower all the mower units unless a positive mechanical lock is provided.
8. Storage location
   - Cover the machine and store it in a dry place where it will not be exposed to rain.

Precautions for Repair ..... Page 7-2

Adjustment ..... Page 7-2

Adjustment of Brake ..... Page 7-2
Adjustment of Parking Brake ..... Page 7-3
Adjustment of The Neutral Position
of The Piston Pump ..... Page 7-3

Replacement ..... Page 7-4

Replacement of Fuse ..... Page 7-4

Towing .....Page 7-6

Towing The Machine in An
Emergency .....Page 7-6

Precautions for Repair

Warning

The chapter "Repair" in this manual describes practical measures which should be performed by a mechanic with expertise.
The owner should instruct the mechanic with expertise to perform repair service for this machine.

Caution

First, learn well the operations you plan to perform.

Important

Use tools appropriate for each operation.

Important

Use Baroness genuine parts for replacement and accessories.
Our product warranty may be void if you use non-genuine parts for replacement or accessories.

Adjustment

Adjustment of Brake

Caution

If the brake wire is cut, the machine will be unable to stop. This would be extremely dangerous.
If the brake wire is cracked or damaged, replace it with a new one immediately.

Caution

If the brake is not sufficiently effective, adjust the brake wire.

Caution

It may result in an unexpected accident if the left and right brakes are not equally effective.

Important

Make sure that the brake is effective and that it is not applied any longer when you release it.
Adjust the brake whenever there is any abnormality.

Important

Adjust to reduce the play in the brake lever as much as possible so that the brake does not drag when the lever is released.

Adjust the brake so that it is in the following conditions.

- Brake applies when the brake pedal is depressed.
- The left and right brakes are equally effective.
- Brake does not apply any longer when the brake pedal is released.

1. Adjust the brake by tightening the brake wire adjustment bolt.
   - If there is too much play in the brake lever, the braking force is reduced and the brake pedal feel become light.
   - If there is too little play in the brake lever, the braking force is increased and the brake pedal feel become heavy.

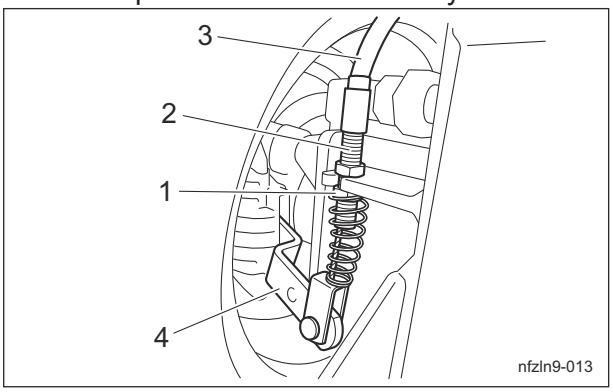

nfzln9-013

1	Lock nut
2	Adjustment bolt
3	Brake wire
4	Brake lever

2. After completing the adjustment of the brake, start the engine and drive to check the following.
   - Make sure that heat is not generated in the brake area.
   - Make sure that the brake applies when the brake pedal is depressed.
   - Make sure that the left and right brakes are equally effective when the brake pedal is depressed.
     If the left and right brakes are not equally effective, make fine adjustments with the adjustment bolt on the brake wire.

Break-In of Brakes

If the brake shoes or brake pads are worn, replace them with new ones.
Immediately after replacement, drive to break in the brakes if the effectiveness of the brakes is low.
While driving, lightly operate the brakes to break in the contact areas.

Adjustment of Parking Brake

Danger

If the brake wire is cut, the machine will be unable to stop. This would be extremely dangerous.
If the brake wire is cracked or damaged, replace it with a new one immediately.
If the brake is not sufficiently effective, adjust the brake wire.

1. Check position of the notch of the parking brake.
2. Depressing the brake pedal firmly, move the parking brake lock lever forward with a foot. Make adjustments with the adjustment bolt inside of the tire so that the latch of the parking brake lock lever is positioned at arrow A (fourth notch from the bottom).
   "Adjustment of Brake" (Page 7-2)

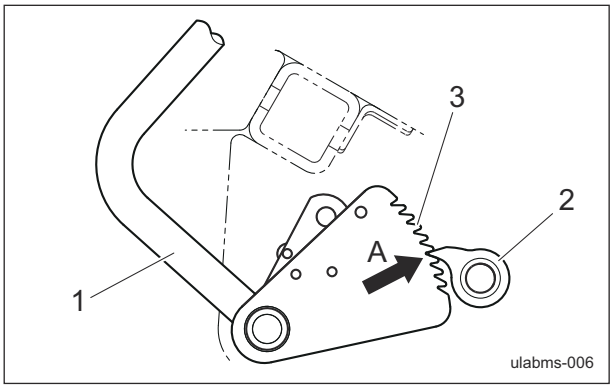

ulabms-006

1	Brake pedal
2	Latch
3	Notch

Adjustment of The Neutral Position of The Piston Pump

Caution

Make sure not to touch rotating tires.

Caution

When adjusting the neutral position, pay close attention to abrupt start of the machine.
Place the jacks beneath the jack-up points, and then lift the machine until all the tires get off the ground.

If the machine moves forward or backward while the traveling pedals are released, they are not set to the neutral position.
Follow the steps below to make adjustments.

1. Stop the engine.
2. Place the jacks beneath the jack-up points, and then lift the machine off the ground.
   "Jack-Up Points" (Page 6-2)
3. Make sure that no tires get contact with the jack stand.
4. Start the engine, and rev it up to the maximum rpm.

5. Adjust the neutral position.
   [1] Loosen the lock nuts.
   [2] Rotate the traction adjusting cam slowly until all wheels stop.
   - If the tires move in the direction of forward travel, rotate the traction adjusting cam clockwise.
   - If the tires move in the direction of backward travel, rotate the traction adjusting cam counterclockwise.
     Find the position where all tires stop, and then, while holding the traction adjusting cam in place, secure it with the lock nut.

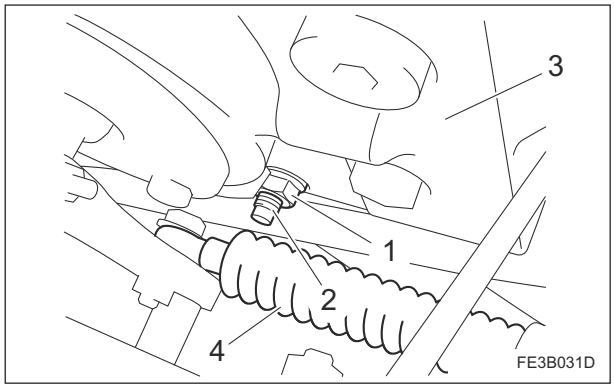

FE3B031D

1	Lock nut
2	Traction adjusting cam
3	Piston pump
4	Push-pull cable

6. Check that the tires do not move.

Replacement

Replacement of Fuse

> **Important**
>
> When performing maintenance on the electrical system, be sure to remove the negative battery wire.

> **Important**
>
> If a fuse blows, a short may have occurred within the electrical circuit.
> Check for the cause, such as faulty terminal connections, damaged wiring or terminals, or incorrect wiring.

> **Important**
>
> For fuse replacement, clean the fuse mounting area with use of compressed air before mounting the fuse.

Fuse Box

The fuse box includes spare fuses and tools.

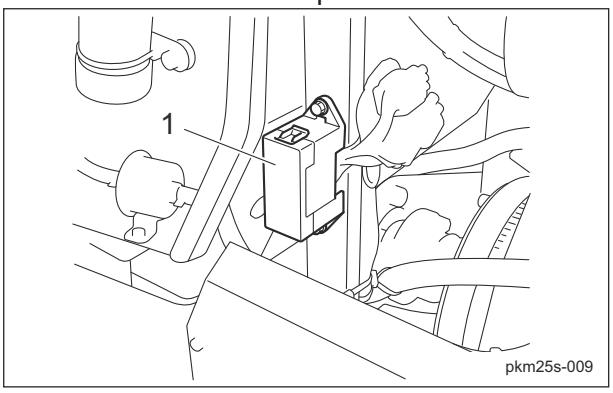

pkm25s-009

1	Fuse box

The fuses are standard mini fuses for automobiles.
Replace them with fuses of the rated capacity.

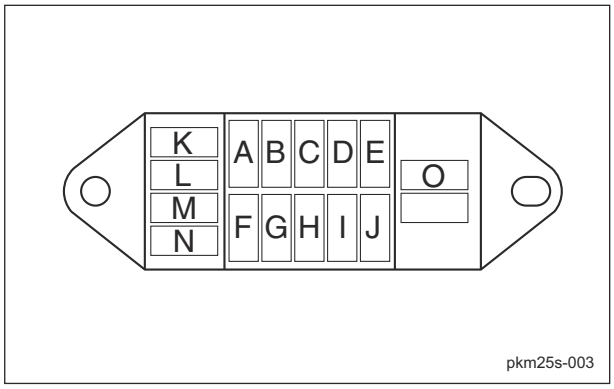

pkm25s-003

A	5 A	Glow lamp timer
B	5 A	Glow lamp
C	5 A	Fuel pump
D	5 A	Charge lamp, oil pressure (engine oil pressure) lamp, water temperature gauge, buzzer, hour meter, fuel gauge
E	15 A	Reel normal rotation solenoid, reel reverse rotation solenoid, slight lift check valve
F	15 A	Light, USB charger
G	5 A	Glow lamp timer
H	5 A	Alternator (IG)
I	5 A	Proximity switch relay, #5 proximity switch relay, #4/#5 proximity switch, Solenoid relay (when back lapping), relay box
J	5 A	Starter relay, seat switch relay, fuel stop solenoid relay, reel rotation ON relay, lower lever relay, forward/reverse relay, unit down proximity switch, pump neutral proximity switch, brake proximity switch
K	5 A	Spare
L	5 A	Spare
M	15 A	Spare
N	15 A	Spare
O		Tool

Fuse

(#10265-)
Two fuse wirings are located inside the right side cover.

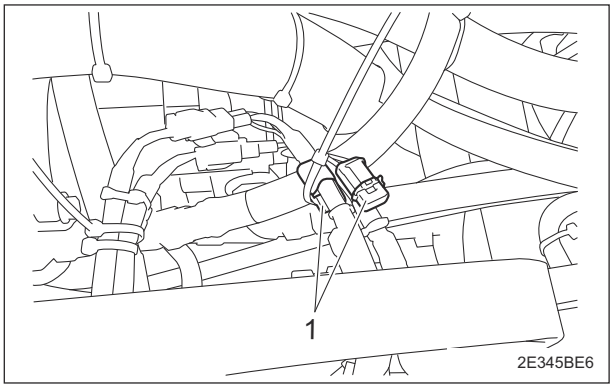

2E345BE6

1	Fuse wiring

Fuses are mini blade.

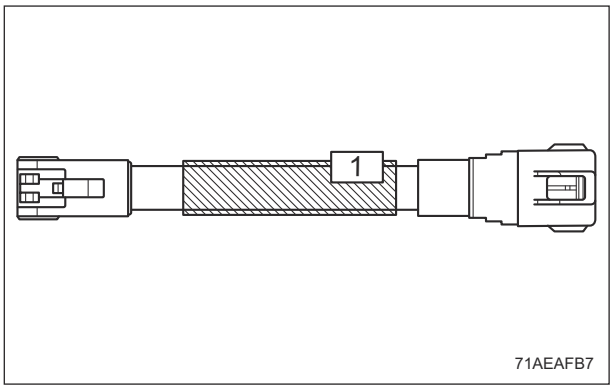

71AEAFB7

1	5 A	Rotation SOL

Fusible Link

Fuse capacities of the fusible links are 30 A and 50 A.

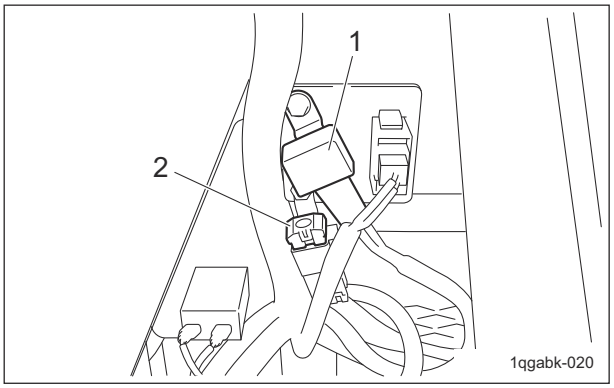

1qgabk-020

1	Fusible link (30 A)
2	Fusible link (50 A)

Towing

Towing The Machine in An Emergency

If the machine does not travel due to engine trouble, etc., you can move it in the following way:

Caution

Before restarting the engine, be sure to close the bypass.

Important

Do not touch the unload valve except when towing the machine.

Important

When towing the machine, obey the following restrictions.
Obey the speed and the time restrictions to prevent damaging the pump or motor.

- Speed: Do not travel at a speed more than 3.0 km/h.
- Time: Do not tow the machine for more than 3 minutes.

When towing the machine for more than 3 minutes, start the engine and circulate the hydraulic oil in the hydraulic circuit. Therefore, do not tow the machine until restart the engine after completed repairs.

Important

Do not loosen the unload valve three turns or more.

1. Stop the engine.
   "Procedure to Stop Engine" (Page 5-14)
2. Apply the parking brake.
3. Chock the wheels.
4. Secure the machine with ropes.

   Front side

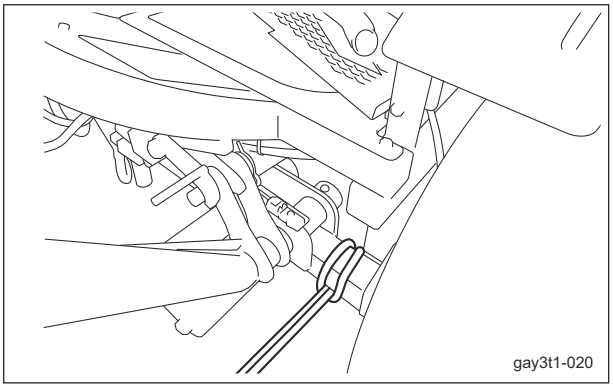

gay3t1-020

   Rear side

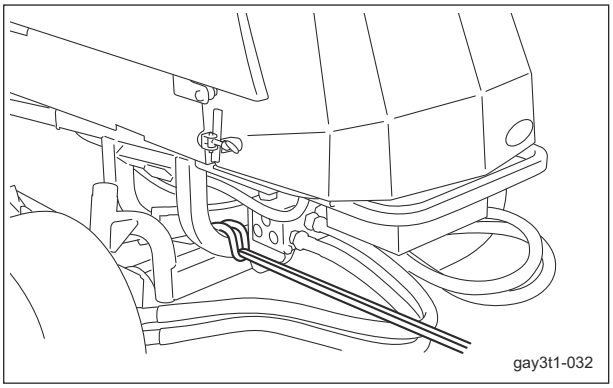

gay3t1-032

5. Open the underseat cover.
   "Procedure to Open/Close Underseat Cover" (Page 5-3)
6. Open the bypass.
   Rotate the unload valve 1 to 1.5 turns counterclockwise to set it to the "Unload" position.

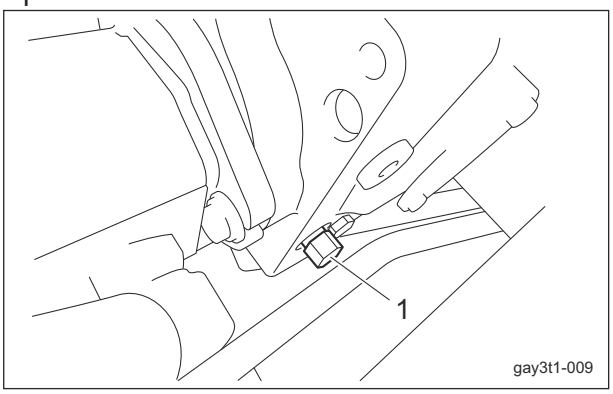

gay3t1-009

1	Unload valve

7. Close the underseat cover.
8. Remove the wheel stoppers.

9. Depress the brake pedal to release the parking brake.

> **⚠ Warning**
>
> While towing, always keep your foot on the brake pedal to make sure you can depress it at any time to stop.

10. Tow the machine slowly.
11. After towing is completed, close the bypass. Rotate the unload valve 1 to 1.5 turns clockwise to set it to the "Onload" position.

Appended Table

Tightening Torques .....Page 8-2

Standard Tightening Torques .....Page 8-2
Principal Tightening Torques ..... Page 8-5

Daily Check List ..... Page 8-7

Maintenance Schedule ..... Page 8-8

List of Adjusted Values ..... Page 8-13

Appended Table

Tightening Torques

Important

Refer to the Tightening Torque table.
Note that the Baroness product warranty may not apply to defects caused by incorrect or overtorque tightening, etc.

Standard Tightening Torques

Bolts and Nuts

Important

A number of bolts are used in each part of this machine.
Be sure to re-tighten the bolts and nuts, because they may be loosened at the earlier stage of the use.

- As to the bolts and nuts without any special instruction, tighten them in appropriate tightening torque with proper tool.
  Too much tightening may cause the looseness or damage of the screw.
- The strength of tightening is determined by types of screws, strength, the friction of thread face or base face and others.
  The table below is for the galvanized or parkerized bolts.
  In case that the strength of internal thread is weak, it is not applied.
- Do not use rusty or sand attached "screw."
  Otherwise, it may cause insufficient tightening even if you apply the specified tightening torque.
  The friction of the screw face becomes higher and the tightening torque is canceled out by the friction, therefore sufficient tightening cannot be applied.
- If "screw" is wet by water or oil, do not tighten it with normal tightening torque.
  If the screw is wet, the torque coefficient will get smaller and it may result in too much tightening.
  Too much tightening may cause looseness by the screw stretched or result in damage.
- Do not use a bolt experienced too much burden.
- Using the impact wrench requires the skill.
  Do exercise as much as possible for steady tightening.

Nominal diameter	General bolt		
	Strength classification 4.8		
	N-m	kgf-cm	lb-in
M5	3 - 5	30.59 - 50.99	26.55 - 44.26
M6	7 - 9	71.38 - 91.77	61.96 - 79.66
M8	14 - 19	142.76 - 193.74	123.91 - 168.17
M10	29 - 38	295.71 - 387.49	256.68 - 336.34
M12	52 - 67	530.24 - 683.20	460.25 - 593.02
M14	70 - 94	713.79 - 958.52	619.57 - 831.99
M16	88 - 112	897.34 - 1142.06	778.89 - 991.31
M18	116 - 144	1,182.85 - 1,468.37	1,026.72 - 1,274.54
M20	147 - 183	1,498.96 - 1,866.05	1,301.10 - 1,619.73
M22	295	3,008.12	2,611.05
M24	370	3,772.89	3,274.87
M27	550	5,608.35	4,868.05
M30	740	7,545.78	6,549.74

Nominal diameter	Heat-treated bolt					
	Strength classification 8.8			Strength classification 10.9		
	N-m	kgf-cm	lb-in	N-m	kgf-cm	lb-in
M5	5 - 7	50.99 - 71.38	44.26 - 61.96	7 - 10	71.38 - 101.97	61.96 - 88.51
M6	8 - 11	81.58 - 112.17	70.81 - 97.36	14 - 18	142.76 - 183.55	123.91 - 159.32
M8	23 - 29	234.53 - 295.71	203.57 - 256.68	28 - 38	285.52 - 387.49	247.83 - 336.34
M10	45 - 57	458.87 - 581.23	398.30 - 504.51	58 - 76	591.43 - 774.97	513.36 - 672.68
M12	67 - 85	683.20 - 866.75	593.02 - 752.34	104 - 134	1,060.49 - 1,366.40	920.50 - 1186.03
M14	106 - 134	1,080.88 - 1,366.40	938.21 - 1,186.03	140 - 188	1,427.58 - 1,917.04	1,239.14 - 1,663.99
M16	152 - 188	1,549.94 - 1,917.04	1,345.35 - 1,663.99	210 - 260	2,141.37 - 2,651.22	1,858.71 - 2,301.26
M18	200 - 240	2,039.40 - 2,447.28	1,770.20 - 2,124.24	280 - 340	2,855.16 - 3,466.98	2,478.28 - 3,009.34
M20	245 - 295	2,498.27 - 3,008.12	2,168.50 - 2,611.05	370 - 450	3,772.89 - 4,588.65	3,274.87 - 3,982.95
M22	-	-	-	530	5,404.41	4,691.03
M24	-	-	-	670	6,831.99	5,930.17
M27	-	-	-	1,000	10,197.00	8,851.00
M30	-	-	-	1,340	13,663.98	11,860.34

Note:
The same values are applied to "fine screw thread."

Appended Table

Hydraulic Hose

The tightening torques for union joints and union adaptors with parallel pipe threads (G, PF) are shown in the table below.
A union joint or adaptor will not become loose or leak as long as it is tightened by the specified torque.
If fluid leaks from the sealed portion, do not attempt to tighten the union joint or adaptor forcibly.
Examine whether any foreign matter or scratches are present on the seat surface.
Tightening a union joint or adaptor forcibly could damage the connection of the joints.
When tightening a union joint or adaptor, use a torque wrench where possible and firmly tighten it by an appropriate torque.

Nominal diameter of the hose size	Nominal diameter of the parallel pipe threads (G, PF)	Tightening torque		
		N-m	kgf-cm	lb-in
6	1/4	25	254.93	221.28
9	3/8	50	509.85	442.55
12	1/2	60	611.82	531.06
15	3/4	120	1,223.64	1,062.12
19	3/4	120	1,223.64	1,062.12
25	1	140	1,427.58	1,239.14
32	1-1/4	170	1,733.49	1,504.67
38	1-1/2	210	2,141.37	1,858.71
50	2	250	2,549.25	2,212.75

Fittings with Parallel Threads (O-Ring Seal Type)

The tightening torques for fittings with parallel threads (O-ring seal method) are shown in the table below.
Tightening the fitting forcibly with a spanner or other such tool to secure it to a set position could damage the fitting, its washers, and other parts.
When tightening an adjustable elbow, use a torque wrench where possible and firmly tighten it by an appropriate torque.

Nominal diameter of thread	Tightening torque		
	N-m	kgf-cm	lb-in.
1/4	34.32 - 49.03	349.96 – 499.96	303.77 – 433.96
3/8	68.65 - 78.45	700.02 – 799.95	607.62 – 694.36
1/2	98.07 - 117.68	1,000.02 – 1,199.98	868.02 – 1,041.59
3/4	147.10 - 176.52	1,499.98 – 1,799.97	1,301.98 – 1,562.38
1	245.17 - 274.59	2,500.00 – 2,799.99	2,170.00 – 2,430.40
1-1/4	294.20	2,999.96	2,603.96
1-1/2	294.20	2,999.96	2,603.96
2	392.27	3,999.98	3,471.98

Principal Tightening Torques

Tightening Torque by Model

LM531
Tighten the following bolts and nuts to the torque specified in the table.
For thread locking adhesive, apply a medium strength thread locker (ThreeBond 1322 anaerobic adhesive or equivalent).

Location		Code	Part name	Tightening torque			Thread locking adhesive
				N-m	kgf-cm	lb-in	
Front wheel	Motor	K0010120902	Bolt, heat-treated M12-90	104 - 134	1,060.49 - 1,366.40	920.50 - 1,186.03	-
	Wheel mounting base	-	Slotted nut attached to hydraulic motor 1-20UNEF	280 - 300	2,855.16 - 3,059.10	2,478.28 - 2,655.30	-
	Wheel	K0011120352	Bolt, heat-treated M12-35P1.5	110	1,121.67	973.61	-
Rear wheel	Motor	K0013120702	Bolt, heat-treated M12-70	104 - 134	1,060.49 - 1,366.40	920.50 - 1,186.03	-
	Wheel mounting base	-	Slotted nut attached to hydraulic motor 1-20UNEF	280 - 300	2,855.16 - 3,059.10	2,478.28 - 2,655.30	-
	Wheel	K0011120352	Bolt, heat-treated M12-35P1.5	110	1,121.67	973.61	-
Engine		K0017100252	Bolt, small, heat-treated M10-25P1.25	45 - 57	458.87 - 581.23	398.30 - 504.51	-
			Bolt, small, heat-treated M10-25P1.25 (Top left front of engine)	29 - 38	295.71 - 387.49	256.68 - 336.34	-
		K3680000030	M3.5 screw (accessories)	0.78 - 1.18	7.95 - 12.03	6.90 - 10.44	-
Electric components for engine		-	Starter B terminal (M8)	5.9 - 11.7	60.16 - 119.30	52.22 - 103.56	-
		-	Alternator B terminal （M6）	5.9 - 9.8	60.16 - 99.93	52.22 - 86.74	-
		-	Glow plug connection terminal nut （M4）	1.0 - 1.8	10.20 - 18.35	8.85 - 15.93	-
Tie rod		(K1610000020)	Slotted nut (Tie rod end right Assy)	45	458.87	398.30	-
		(K1611000020)	Slotted nut (Tie rod end left Assy)	45	458.87	398.30	-
Kingpin stopper		K0000100252	Bolt, M10-25	29 - 38	295.71 - 387.49	256.68 - 336.34	-
Cross-valve		K0013101252	Bolt, heat-treated M10-125	29 - 38	295.71 - 387.49	256.68 - 336.34	-
Universal joint		K001A100401	Bolt, w/hexagon hole, M10-40	62 - 72	632.21 - 734.18	548.76 - 637.27	○
		K0011100252	Bolt, heat-treated M10-25P1.25	58 - 76	591.43 - 774.97	513.36 - 672.68	-

Appended Table

Location	Code	Part name	Tightening torque			Thread locking adhesive
			N-m	kgf-cm	lb-in	
ROPS	K0010120402	Bolt, heat-treated M12-40	104 - 134	1,060.49 - 1,366.40	920.50 - 1,186.03	-
Mower stopper	K0041060122	Screw, + flat head M6-12	-	-	-	O
Proximity switch NO V-out	K0000050202	BOLT, M5-20	2.5	25.49	22.13	-
	K0100050002	NUT, M5	2.5	25.49	22.13	-
Battery terminal	K3610000230	WIRE, BATTERY (+) 1250	6.0	61.18	53.11	-
	K3611000420	WIRE, TO EARTH 1000	6.0	61.18	53.11	-

Daily Check List

LM531
● · · · Inspect, adjust, supply, clean (first time)
○ · · · Inspect, adjust, supply, clean
▲ · · · Replace (first time)
△ · · · Replace

Maintenance Item			Before Work	After Work	Remarks
Engine	*1	Check engine oil	○		
	*1	Check fuel	○		
		Check fuel filter	○		
	*1	Check coolant	○		
	*1	Check engine area	○		
		Check air cleaner	○		
		Check radiator cover	○		
		Check radiator	○		
		Clean engine area		○	
		Clean radiator cover		○	
	*1	Clean radiator		○	
Main vehicle		Check oil cooler	○		
	*2	Check battery	○		
		Check hydraulic oil	○		
		Check tire	○		
		Check cover	○		
		Check wire	○		
		Check brake pedal	○		
		Check parking brake lock lever	○		
		Check traveling pedal	○		
		Check pedal stopper	○		
		Check oil or water leaks	○		
		Check machine exterior	○		
		Check bolts and nuts	○		
		Check hour meter	○		
		Check water temperature gauge	○		
		Check fuel gauge	○		
		Check pilot lamp	○		
		Check safety mechanisms	○		
		Check steering wheel	○		
		Check lighting	○		
		Clean oil cooler		○	
		Clean machine exterior		○	

· *1: Refer to the Engine's Owner's Manual.
· *2: Refer to the Battery's Owner's Manual.

Appended Table

Maintenance Schedule

LM531
● · · · Inspect, adjust, supply, clean (first time)
○ · · · Inspect, adjust, supply, clean
▲ · · · Replace (first time)
△ · · · Replace

Maintenance Item			Before Work	After Work	Every Week	Every 50 hrs.	Every 100 hrs.	Every 150 hrs.	Every 200 hrs.	Every 250 hrs.	Every 400 hrs.	Every 500 hrs.	Every 800 hrs.	Every 1000 hrs.	Every 1500 hrs.	Every 3000 hrs.	every month	every 3 months	Every year	Every 2 years	Every 4 years	When Required	Remarks
Engine	*3	Open air cleaner evacuator valve to remove dust		○	○																		Open valve every week or daily in dusty conditions
	*2.*3	Check fuel hoses and clamp bands				○																	
		Clean fuel filter					○																
		Check water separator					○																
		Draining of water separator					○																
	*2.*3	Clean air cleaner element					○																Air cleaner should be cleaned more often in dusty conditions than in normal conditions
	*3	Check of fan belt tightness					○																
	*2.*3	Check intake air line (air cleaner hose)							○														

Maintenance Item			Before Work	After Work	Every Week	Every 50 hrs.	Every 100 hrs.	Every 150 hrs.	Every 200 hrs.	Every 250 hrs.	Every 400 hrs.	Every 500 hrs.	Every 800 hrs.	Every 1000 hrs.	Every 1500 hrs.	Every 3000 hrs.	every month	every 3 months	Every year	Every 2 years	Every 4 years	When Required	Remarks
Engine	*3	Check radiator hoses and clamp bands							○									○					Check every 200 hours or every 6 month whichever comes earlier
		Clean water separator									○												
	*1.*3	Clean fuel tank interior										○											
	*1.*3	Clean water jacket (radiator interior)										○											
	*1.*3	Check valve clearance											○										
	*1.*2.*3	Check of fuel injection nozzle injection pressure												○									
	*1.*2.*3	Check injection pump													○								
	*3.*6	Replace engine oil				▲	△												△				Initial 50 hours, thereafter every 100 hours or every year whichever comes earlier

Appended Table

Maintenance Item			Before Work	After Work	Every Week	Every 50 hrs.	Every 100 hrs.	Every 150 hrs.	Every 200 hrs.	Every 250 hrs.	Every 400 hrs.	Every 500 hrs.	Every 800 hrs.	Every 1000 hrs.	Every 1500 hrs.	Every 3000 hrs.	every month	every 3 months	Every year	Every 2 years	Every 4 years	When Required	Remarks
Engine	*3	Replace engine oil filter cartridge				▲			△										△				Initial 50 hours, thereafter every 200 hours or every year whichever comes earlier
		Replace fuel filter cartridge									△												
	*3	Replace fan belt										△								△			Replace every 500 hours or 2 years whichever comes earlier
	*2.*3	Replace air cleaner element																	△				Replace every 6 cleanings or every year whichever comes earlier
	*3	Replace radiator coolant (L.L.C.)																		△			
	*3	Replace radiator hoses and clamp bands																		△			
	*1.*2.*3	Replace fuel hoses and clamp bands																		△			

Maintenance Item			Before Work	After Work	Every Week	Every 50 hrs.	Every 100 hrs.	Every 150 hrs.	Every 200 hrs.	Every 250 hrs.	Every 400 hrs.	Every 500 hrs.	Every 800 hrs.	Every 1000 hrs.	Every 1500 hrs.	Every 3000 hrs.	every month	every 3 months	Every year	Every 2 years	Every 4 years	When Required	Remarks
Engine	*1.*2.*3	Replace intake air line (air cleaner hose) and clamp bands																		△			
Main vehicle		Check hydraulic hose (Moving part)	○																				
		Grease and lubricate				○											○						Maintenance schedules differ according to greasing points
		Check electrical wiring				●	○																
		Check wheel mounting bolts				●	○																
		Check hydraulic hose (Fixed part) condition					○									○							Check every 100 hours or every month whichever comes earlier
		Grease hydraulic motor shaft of the mower unit								○													
		Replace hydraulic oil					▲					△											
		Replace hydraulic oil suction filter					▲					△											
		Replace hydraulic oil line filter					▲					△											

Appended Table

Maintenance Item			Before Work	After Work	Every Week	Every 50 hrs.	Every 100 hrs.	Every 150 hrs.	Every 200 hrs.	Every 250 hrs.	Every 400 hrs.	Every 500 hrs.	Every 800 hrs.	Every 1000 hrs.	Every 1500 hrs.	Every 3000 hrs.	every month	every 3 months	Every year	Every 2 years	Every 4 years	When Required	Remarks
Main vehicle		Replace air breather element					▲					△											
		Replace resin bushing																		△			
	*4	Replace battery																		△			
	*1	Replace hydraulic hoses (Moving part)																		△			
	*1.*5	Replace hydraulic hoses (Moving part) relating to steering																		△			
	*1	Replace hydraulic hoses (Fixed part)																			△		
	*1	Replace brake cables																				△	
	*1	Replace traveling cable																				△	
		Replace throttle wire																				△	
	*1	Replace brake pads																				△	

- *1: Consult your local Baroness Dealer or local KUBOTA Dealer for this service.
- The items above (*2 marked) are registered as emission related critical parts by KUBOTA in the U.S. EPA nonroad emission regulation.
  As the engine owner, you are responsible for the performance of the required maintenance on the engine according to the above instruction.
  Please see the Engine's Warranty Statement in detail.
- *3: Refer to the Engine's Owner's Manual.
- *4: Refer to the Battery's Owner's Manual.
- *5: Be sure to replace hydraulic hoses for steering cylinder and hydraulic hoses for hydraulic motor of wheel relating to steering every two years.
- *6: The replacement period of engine oil is scheduled shorter than the engine factory-recommended period according to the features of this machine.
- The values for consumables are not guaranteed.

List of Adjusted Values

Fan belt	10 mm (0.39 in)	Slack when applying 98 N (10 kgf) force to the belt at the middle point
	Adjustment: 200 - 300 N (20.39 - 30.59 kgf) Replacement: 267 - 361 N (27.23 - 36.81 kgf)	Measurement of belt tension by using a sonic type tension meter

Appended Table

Records

Daily Check Records ..... Page 9-2

Maintenance Records .....Page 9-5

Records

Daily Check Records

LM531
Use this table freely for your records of the daily check.

Model		Serial Number	

Items											
Engine	Check engine oil										
	Check fuel										
	Check fuel filter										
	Check coolant										
	Check engine area										
	Check air cleaner										
	Check radiator cover										
	Check radiator										
	Clean engine area										
	Clean radiator cover										
	Clean radiator										

Items											
Main vehicle	Check oil cooler										
	Check battery										
	Check hydraulic oil										
	Check tire										
	Check cover										
	Check wire										
	Check brake pedal										
	Check parking brake lock lever										
	Check traveling pedal										
	Check pedal stopper										
	Check oil or water leaks										
	Check machine exterior										
	Check bolts and nuts										
	Check hour meter										

Records

Items											
Main vehicle	Check water temperature gauge										
	Check fuel gauge										
	Check pilot lamp										
	Check safety mechanisms										
	Check steering wheel										
	Check lighting										
	Clean oil cooler										
	Clean machine exterior										

Maintenance Records

LM531
Use this table freely for your records of the maintenance.

Model		Serial Number	

Items											
Engine	Open air cleaner evacuator valve to remove dust										
	Check fuel hoses and clamp bands										
	Clean fuel filter										
	Check water separator										
	Draining of water separator										
	Clean air cleaner element										
	Check of fan belt tightness										
	Check intake air line (air cleaner hose)										
	Check radiator hoses and clamp bands										
	Clean water separator										
	Clean fuel tank interior										
	Clean water jacket (radiator interior)										

Records

Items											
Engine	Check valve clearance										
	Check of fuel injection nozzle injection pressure										
	Check injection pump										
	Replace engine oil										
	Replace engine oil filter cartridge										
	Replace fuel filter cartridge										
	Replace fan belt										
	Replace air cleaner element										
	Replace radiator coolant (L.L.C.)										
	Replace radiator hoses and clamp bands										
	Replace fuel hoses and clamp bands										
	Replace intake air line (air cleaner hose) and clamp bands										
Main vehicle	Check hydraulic hose (Moving part)										
	Grease and lubricate										

Items											
Main vehicle	Check electrical wiring										
	Check wheel mounting bolts										
	Check hydraulic hose (Fixed part) condition										
	Grease hydraulic motor shaft of the mower unit										
	Replace hydraulic oil										
	Replace hydraulic oil suction filter										
	Replace hydraulic oil line filter										
	Replace air breather element										
	Replace resin bushing										
	Replace battery										
	Replace hydraulic hoses (Moving part)										
	Replace hydraulic hoses (Moving part) relating to steering										
	Replace hydraulic hoses (Fixed part)										
	Replace brake cables										

Records

Items											
Main vehicle	Replace traveling cable										
	Replace throttle wire										
	Replace brake pads										

BARONESS®

Quality on Demand

KYOEISHA CO., LTD.

1-26, Miyuki-cho, Toyokawa-city, Aichi-pref, 442-8530 Japan
Phone: (81) 533-84-1390
https://www.baroness.co.jp

LM531---UM--99Z/26J-en-S.K